MIXING BOX

MB
REV.#4 02/08/2010

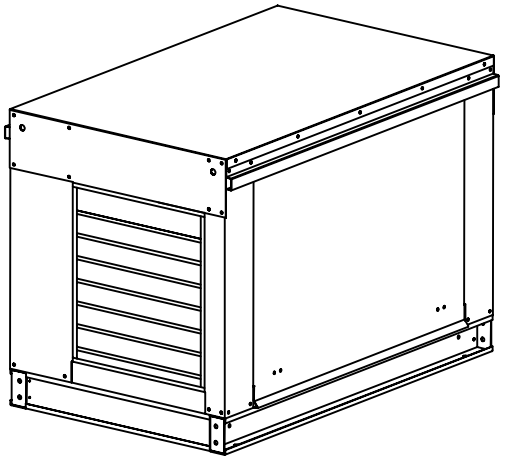

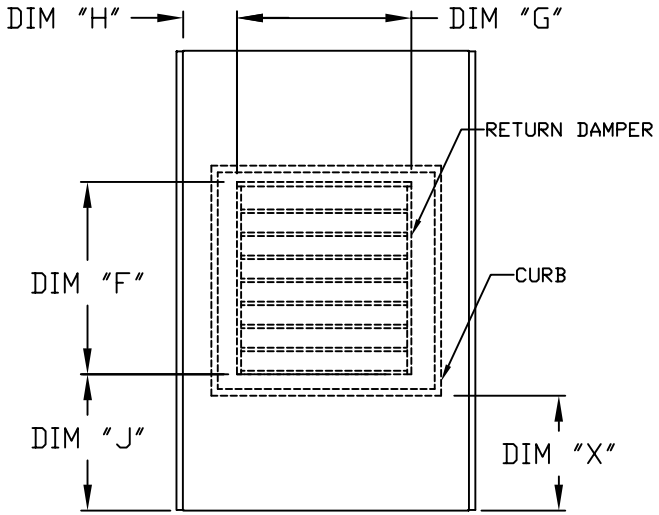

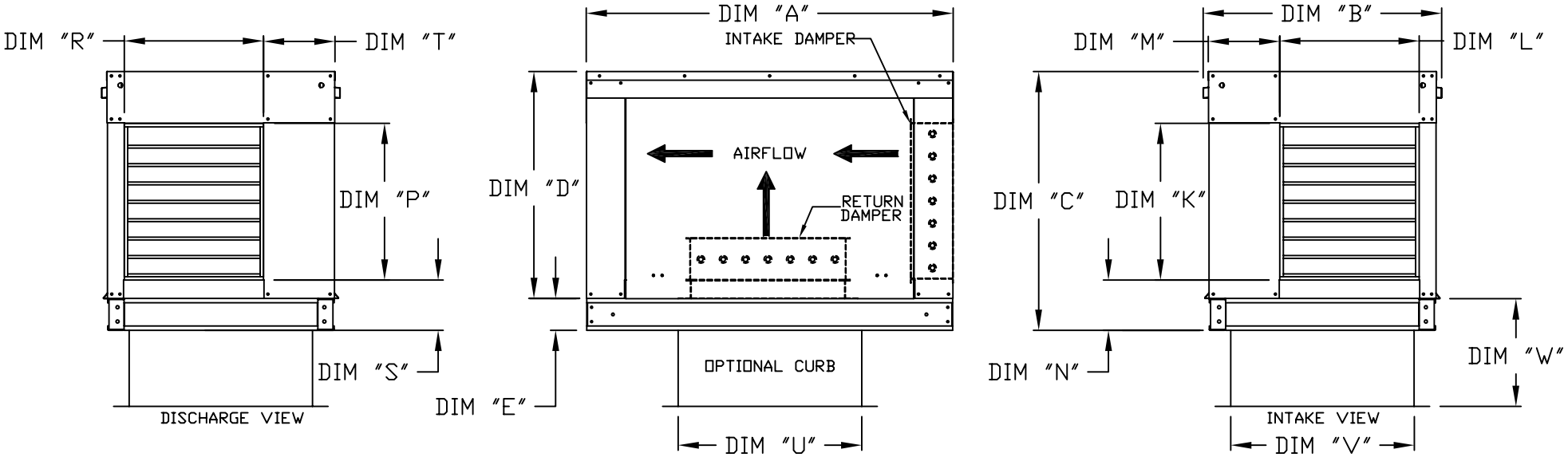

		UNIT DIMENSIONS					RETURN OPENING				INTAKE OPENING				DISCHARGE OPENING				CURB DIMENSIONS			
MODEL	WEIGHT	A	B	C	D	E	F	G	H	J	K	L	M	N	P	R	S	T	U	V	W	X
MB-1	155 LBS	42-1/8	27-3/8	29-3/4	26	3-3/4	18	14	8	14	18	16	8	5-3/4	18	16	5-3/4	8	21	21	20	12-1/2
MB-2	215 LBS	42-1/8	37-3/8	36-3/4	33	3-3/4	24	22-3/4	8	11	24	22-3/4	8	5-3/4	24	22-3/4	5-3/4	8	31	31	20	7-1/2
MB-3	280 LBS	42-1/8	41-3/8	43-3/8	38-1/8	5-1/4	30	28	8	7	30	30	8	7-1/2	30	30	7-1/2	8	35	35	20	4-1/2
MB-4	475 LBS	54-3/16	48-7/16	51-3/8	46-1/8	5-1/4	36	33	10	11	36	34	10	7-1/2	36	34	7-1/2	10	42	42	20	8
MB-5	575 LBS	54-3/16	59-3/16	58-3/8	53-1/8	5-1/4	43	43	10	6-1/2	43	43	10	7-1/2	43	43	7-1/2	10	52-3/4	52-3/4	20	1-1/4

ALL DIMENSIONS ARE NOMINAL AND GIVEN IN INCHES