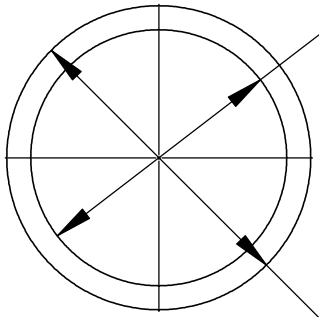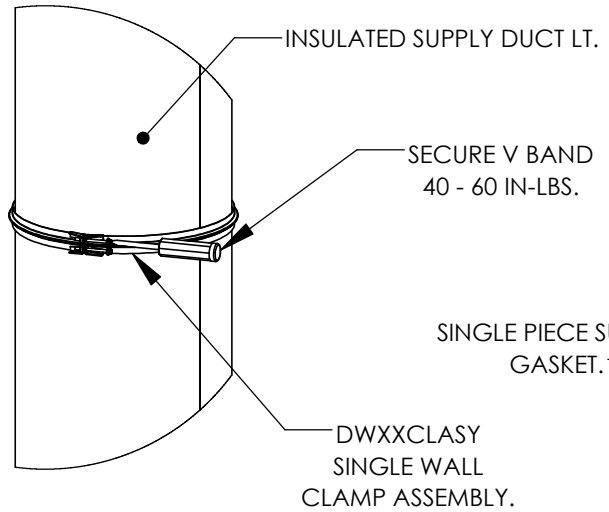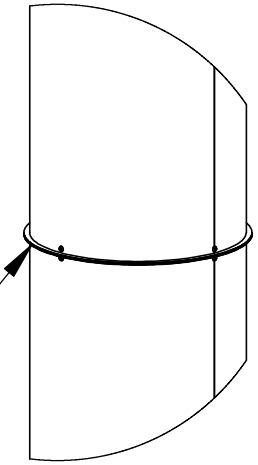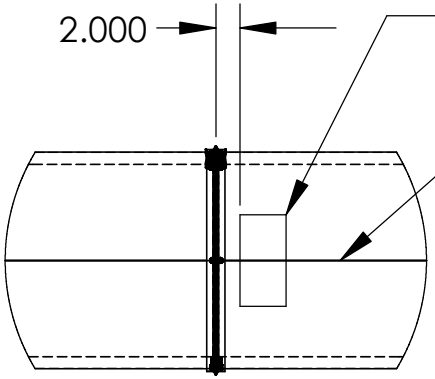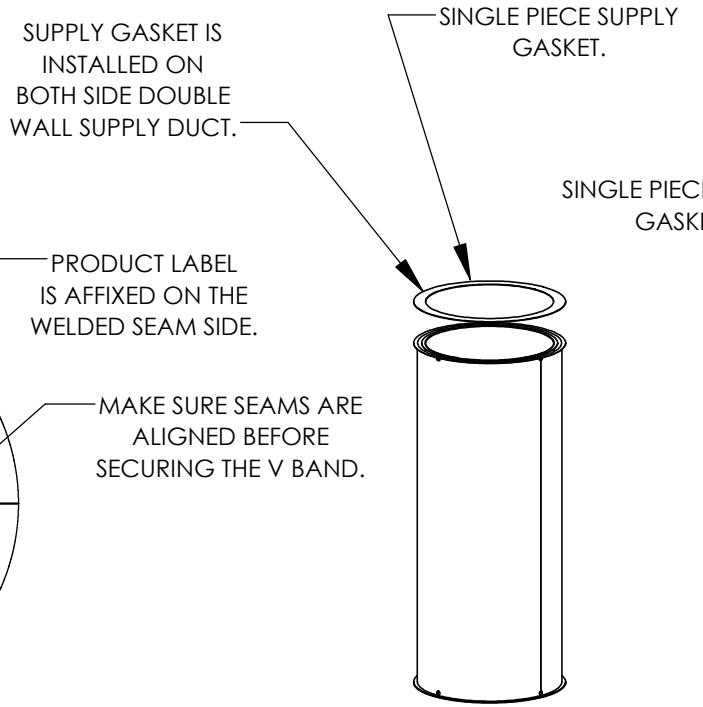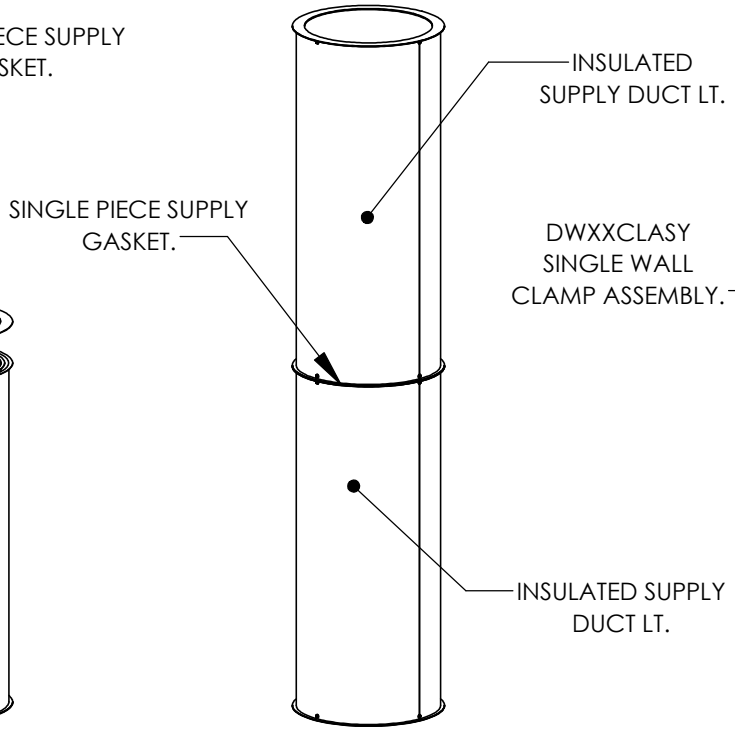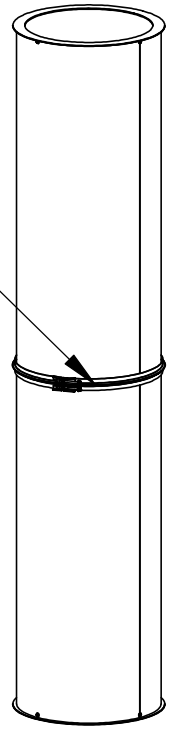Double Wall Gasket & Joint Connection