# MODULAR OUTDOOR DOWN DISCHARGE DIRECT FIRED HEATER PACKAGED UNIT WITH COOLING AND INTAKE HOOD

IHDFSAHCCDP-MPU
REV.#8 06/15/2015

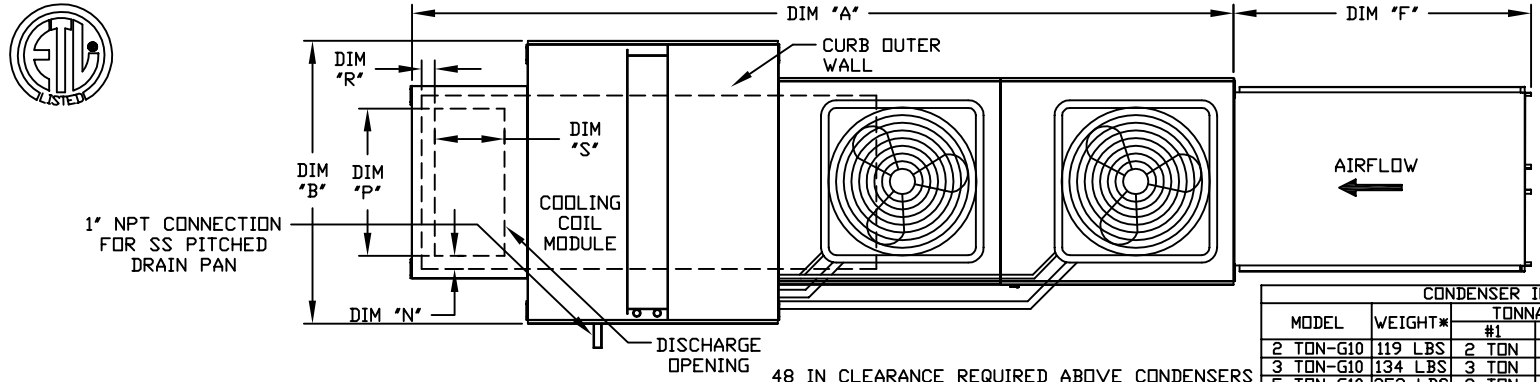


48 IN CLEARANCE REQUIRED ABOVE CONDENSERS

| CONDENSER INFORMATION | | | | | | |
|---|---|---|---|---|---|---|
| MODEL | WEIGHT* | TONNAGE #1 | TONNAGE #2 | CC | DD | EE |
| 2 TON-G10 | 119 LBS | 2 TON | N/A | 26-5/16 | 56-1/16 | 52-3/8 |
| 3 TON-G10 | 134 LBS | 3 TON | N/A | 33-5/16 | 63-1/16 | 59-3/8 |
| 5 TON-G10 | 253 LBS | 2 TON | 3 TON | 33-5/16 | 63-1/16 | 59-3/8 |
| 5 TON-G10 | 302 LBS | 2.5 TON | 2.5TON | 32-13/16 | 62-9/16 | 58-7/8 |
| 5 TON-G15 | 197 LBS | 5 TON | N/A | 32-13/16 | 69-9/16 | 65-7/8 |
| 7.5 TON-G15 | 348 LBS | 2.5 TON | 5 TON | 32-13/16 | 69-9/16 | 65-7/8 |
| 8 TON-G15 | 331 LBS | 3 TON | 5 TON | 33-5/16 | 71-11/16 | 68 |
| 10 TON-G15 | 394 LBS | 5 TON | 5 TON | 32-13/16 | 69-9/16 | 65-7/8 |
| 10 TON-G18 | 394 LBS | 5 TON | 5 TON | 32-13/16 | 76-3/16 | 70-7/8 |
| 10 TON-920 | 394 LBS | 5 TON | 5 TON | 32-13/16 | 97-3/16 | 91-15/16 |

R410A REFRIGERANT

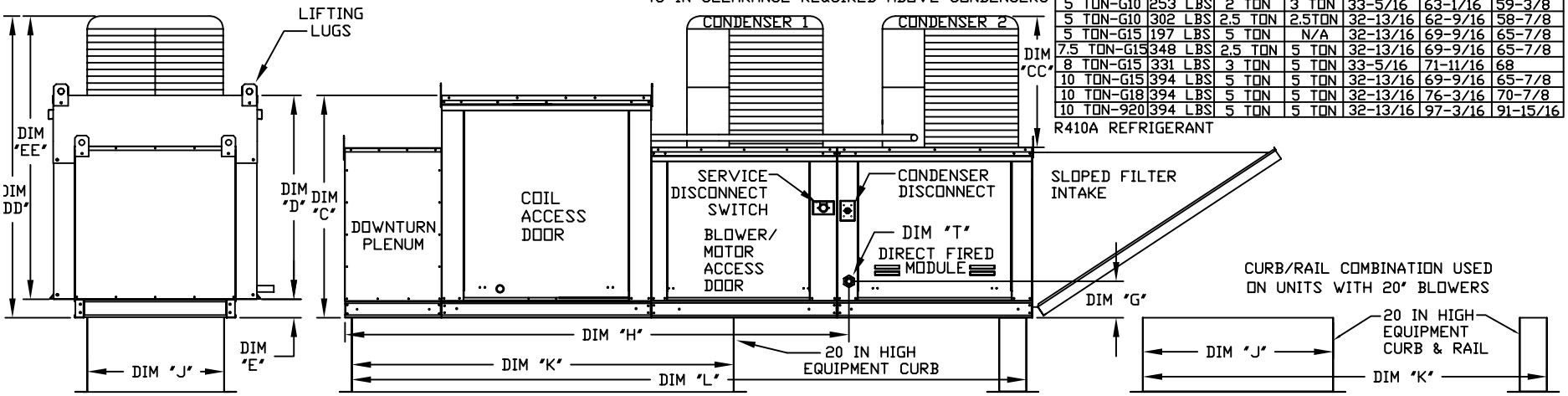


ALL DIMENSIONS ARE NOMINAL AND GIVEN IN INCHES.

MAX. ROOF OPENING 2" SMALLER THAN CURB OUTSIDE DIMENSION

| | | UNIT DIMENSIONS | | | | | | | | CURB/RAIL | | | DISCHARGE OPENING | | | |
|---|---|---|---|---|---|---|---|---|---|---|---|---|---|---|---|---|
| MODEL | WEIGHT* | A | B | C | D | E | F | G | H | J | K | L | N | P | R | S |
| D.250-G10 | 1030 LBS | 135 | 39-3/8 | 42-3/4 | 39 | 3-3/4 | 44-3/8 | 7-13/16 | 95-7/16 | 21 | 71 | 131-5/8 | 3-9/16 | 13-7/8 | 1-13/16 | 11-1/2 |
| D.500-G10 | 1035 LBS | 135 | 39-3/8 | 42-3/4 | 39 | 3-3/4 | 44-3/8 | 7-13/16 | 95-7/16 | 21 | 71 | 131-5/8 | 3-9/16 | 13-7/8 | 1-13/16 | 11-1/2 |
| D.250-G15 | 1385 LBS | 149 | 49-3/8 | 47-3/4 | 44 | 3-3/4 | 53-5/8 | 7-13/16 | 109-7/16 | 31 | 79 | 145-5/8 | 4-5/16 | 22-3/8 | 1-9/16 | 18 |
| D.500-G15 | 1390 LBS | 149 | 49-3/8 | 47-3/4 | 44 | 3-3/4 | 53-5/8 | 7-13/16 | 109-7/16 | 31 | 79 | 145-5/8 | 4-5/16 | 22-3/8 | 1-9/16 | 18 |
| D.750-G15 | 1395 LBS | 149 | 49-3/8 | 47-3/4 | 44 | 3-3/4 | 53-5/8 | 7-13/16 | 109-7/16 | 31 | 79 | 145-5/8 | 4-5/16 | 22-3/8 | 1-9/16 | 18 |
| D.500-G18 | 1615 LBS | 154 | 54-3/8 | 56-3/8 | 51-1/8 | 5-1/4 | 51-5/8 | 9-1/2 | 114-7/16 | 35 | 84 | 150-5/8 | 6-5/16 | 22-3/8 | 1-1/2 | 18 |
| D.750-G18 | 1620 LBS | 154 | 54-3/8 | 56-3/8 | 51-1/8 | 5-1/4 | 51-5/8 | 9-1/2 | 114-7/16 | 35 | 84 | 150-5/8 | 6-5/16 | 22-3/8 | 1-1/2 | 18 |
| D.1000-G18 | 1625 LBS | 154 | 54-3/8 | 56-3/8 | 51-1/8 | 5-1/4 | 51-5/8 | 9-1/2 | 114-7/16 | 35 | 84 | 150-5/8 | 6-5/16 | 22-3/8 | 1-1/2 | 18 |
| D.1000-920 | 2605 LBS | 203-3/16 | 60-7/16 | 64-3/8 | 59-1/8 | 5-1/4 | 76-3/8 | 13-9/16 | 151 | 42 | 115-3/16 | 199-7/8 | 5-1/4 | 31-1/2 | 1-13/16 | 23-1/2 |
| D.1500-920 | 2620 LBS | 203-3/16 | 60-7/16 | 64-3/8 | 59-1/8 | 5-1/4 | 76-3/8 | 13-9/16 | 151 | 42 | 115-3/16 | 199-7/8 | 5-1/4 | 31-1/2 | 1-13/16 | 23-1/2 |

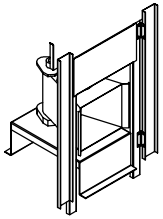

Direct Fired (DF) Profile Plate Assembly

UNIT INFORMATION.

| | BTU RANGE (MBH) | | | GAS PRESSURE | | GAS CONNECTION | TONNAGE RANGE | | FILTERS | |
|---|---|---|---|---|---|---|---|---|---|---|
| MODEL | BURNER LENGTH | BTU LOW | BTU HIGH | MIN | MAX | "T" (NPT) | MIN | MAX | FILTER SIZE & QTY | MAX. FILTER VELOCITY |
| D.250-G10 | 6" | 18 | 275 | 7" WC | 14" WC | 3/4 | 2 Ton | 5 Ton | 16"x20"x2" (3) | @3000 CFM = 572 FPM |
| D.500-G10 | 12" | 18 | 550 | 7" WC | 14" WC | 3/4 | 2 Ton | 5 Ton | 16"x20"x2" (3) | @3000 CFM = 572 FPM |
| D.250-G15 | 6" | 18 | 275 | 7" WC | 14" WC | 1 | 2 Ton | 5 Ton | 16"x20"x2" (3) | @6000 CFM = 572 FPM |
| D.500-G15 | 12" | 18 | 550 | 7" WC | 14" WC | 1 | 5 Ton | 10 Ton | 20"x25"x2" (3) | @6000 CFM = 696 FPM |
| D.750-G15 | 18" | 27.5 | 825 | 7" WC | 14" WC | 1 | 5 Ton | 10 Ton | 20"x25"x2" (3) | @6000 CFM = 696 FPM |
| D.500-G18 | 12" | 18 | 550 | 7" WC | 14" WC | 1 | 5 Ton | 10 Ton | 16"x20"x2" (6) | @8000 CFM = 762 FPM |
| D.750-G18 | 18" | 27.5 | 825 | 7" WC | 14" WC | 1 | 5 Ton | 10 Ton | 16"x20"x2" (6) | @8000 CFM = 762 FPM |
| D.1000-G18 | 24" | 36.6 | 1100 | 7" WC | 14" WC | 1 | 10 Ton | 10 Ton | 16"x20"x2" (6) | @8000 CFM = 762 FPM |
| D.1000-920 | 24" | 36.6 | 1100 | 7" WC | 5 PSI | 1-1/4 | 10 Ton | 10 Ton | 16"x20"x2" (10) | @13000 CFM = 743 FPM |
| D.1500-920 | 30" | 45.8 | 1375 | 7" WC | 5 PSI | 1-1/4 | 10 Ton | 10 Ton | 16"x20"x2" (10) | @13000 CFM = 743 FPM |

*ADD CONDENSING UNIT WEIGHT TO WEIGHT IN TABLE ABOVE

**Direct Fired Profile Plate Specifications:**

**Description:**
Direct fired burners shall have patented (US Patent No: US6629523B2), self-adjusting profile plates designed to ensure proper air velocity and pressure drop across the burner. Profile plates shall allow burners to achieve clean combustion by limiting by-product levels to a maximum of 5ppm of carbon monoxide (CO), and 0.5ppm of nitrogen dioxide (NO2).

**Application:**
Spring-loaded burner profile plates are engineered to automatically react to the momentum of a fresh air stream, without the need for any motors or actuators to mechanically adjust the With this feature, all DF units are designed for demand control ventilation (DCV) requirements.

**Certifications:**
All profile plate assemblies shall be included in the DF unit's ETL listing and comply with combine safety standards ANSI Z83.4 and CSA 3.7 (non-recirculating DF heaters) and ANSI Z83.18 (recirculating DF heaters).

**General Construction:**
-Profile plates shall be formed from G90 galvanized steel.
-Profile plates shall vary in size per unit.
-Profile plates shall be mounted along the same plane as the discharge of the burner.
-Design shall incorporate properly torqued, permanently mounted spring hinges.
-Spring hinges shall be made from plated steel.