REV.#3 07/25/2012

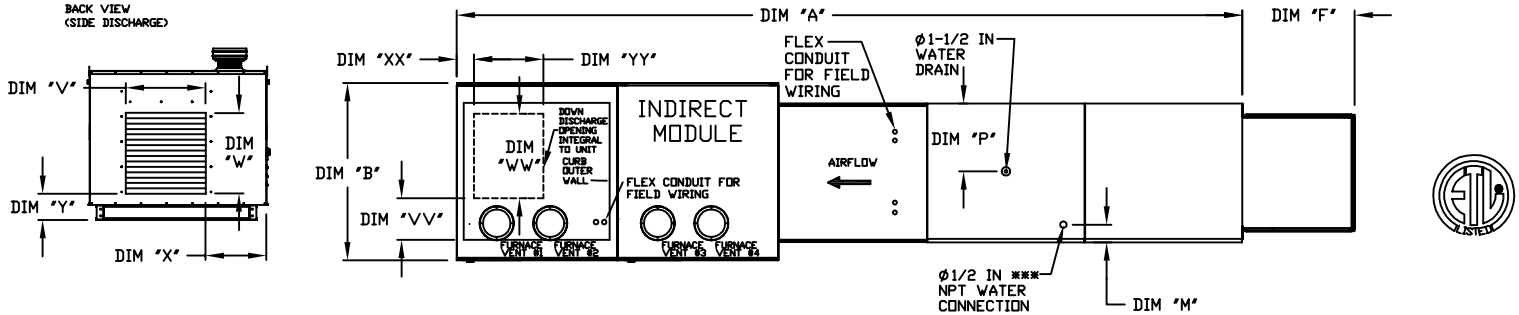

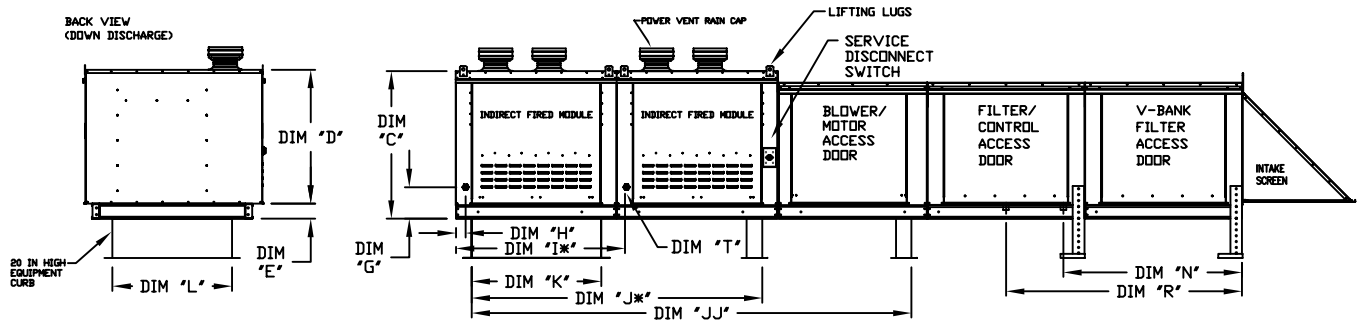

MAX. ROOF OPENING 2" SMALLER THAN CURB OUTSIDE DIMENSION

ALL DIMENSIONS ARE NOMINAL AND GIVEN IN INCHES.

MODEL	UNIT DIMENSIONS													WATER INLET		DRAIN OPENING		SIDE DISCHARGE OPENING				DOWN DISCHARGE OPENING				GAS CONNECTION	# OF FURNACES
	A	B	C	D	E	F	G	H	I*	J*	JJ	K	L	M	N	P	R	V	W	X	Y	VV	WW	XX	YY	"T" (NPT)	
1-IBT.150-G10	156-3/4	49-1/2	39-9/16	35-13/16	3-3/4	22-3/8	8-3/4	2-11/16	N/A	N/A	89-3/16	71	21	4-1/2	38-1/2	13	48-1/4	17-3/4	17-3/4	18-1/2	7-1/4	3	16-3/4	3-1/8	21	3/4	1
1-IBT.200-G10	156-3/4	49-1/2	39-9/16	35-13/16	3-3/4	22-3/8	8-3/4	2-11/16	N/A	N/A	89-3/16	71	21	4-1/2	38-1/2	13	48-1/4	17-3/4	17-3/4	18-1/2	7-1/4	3	16-3/4	3-1/8	21	3/4	1
1-IBT.300-150-150-G10	156-3/4	49-1/2	39-9/16	35-13/16	3-3/4	22-3/8	8-3/4	2-11/16	N/A	N/A	89-3/16	71	21	4-1/2	38-1/2	13	48-1/4	17-3/4	17-3/4	18-1/2	7-1/4	3	16-3/4	3-1/8	21	3/4	2
1-IBT.400-200-200-G10	156-3/4	49-1/2	39-9/16	35-13/16	3-3/4	22-3/8	8-3/4	2-11/16	N/A	N/A	89-3/16	71	21	4-1/2	38-1/2	13	48-1/4	17-3/4	17-3/4	18-1/2	7-1/4	3	16-3/4	3-1/8	21	3/4	2
2-IBT.200-G15	164-3/4	49-1/2	39-9/16	35-13/16	3-3/4	30-5/16	8-3/4	2-11/16	N/A	N/A	97-3/16	79	31	4-1/2	38-1/2	18	48-1/4	24-1/2	17-3/4	18-1/2	7-1/4	5	24	3-1/8	21	1	1
2-IBT.300-G15	164-3/4	49-1/2	53-7/8	50-1/8	3-3/4	30-5/16	8-3/4	2-11/16	N/A	N/A	97-3/16	79	31	4-1/2	38-1/2	18	48-1/4	24-1/2	24-1/2	18-1/2	7-1/4	5	24	3-1/8	21	1	1
2-IBT.400-G15	164-3/4	49-1/2	53-7/8	50-1/8	3-3/4	30-5/16	8-3/4	2-11/16	N/A	N/A	97-3/16	79	31	4-1/2	38-1/2	18	48-1/4	24-1/2	24-1/2	18-1/2	7-1/4	5	24	3-1/8	21	1	1
2-IBT.400-200-200-G15	164-3/4	49-1/2	39-9/16	35-13/16	3-3/4	30-5/16	8-3/4	2-11/16	N/A	N/A	97-3/16	79	31	4-1/2	38-1/2	18	48-1/4	24-1/2	17-3/4	18-1/2	7-1/4	5	24	3-1/8	21	1	2
2-IBT.600-300-300-G15	164-3/4	49-1/2	53-7/8	50-1/8	3-3/4	30-5/16	8-3/4	2-11/16	N/A	N/A	97-3/16	79	31	4-1/2	38-1/2	18	48-1/4	24-1/2	24-1/2	18-1/2	7-1/4	5	24	3-1/8	21	1	2
2-IBT.800-400-400-G15	164-3/4	49-1/2	53-7/8	50-1/8	3-3/4	30-5/16	8-3/4	2-11/16	N/A	N/A	97-3/16	79	31	4-1/2	38-1/2	18	48-1/4	24-1/2	24-1/2	18-1/2	7-1/4	5	24	3-1/8	21	1	2
3-IBT.400-G18	181-3/4	57-3/4	57-1/16	51-13/16	5-1/4	34-3/16	10-3/4	2-11/16	N/A	N/A	102-3/16	84	35	4-1/2	44	20	57-1/4	27-1/2	31	18-1/2	8-3/4	6-3/4	26-1/2	4-1/8	26-1/2	1	1
3-IBT.600-300-300-G18	181-3/4	57-3/4	57-1/16	51-13/16	5-1/4	34-3/16	10-3/4	2-11/16	N/A	N/A	102-3/16	84	35	4-1/2	44	20	57-1/4	27-1/2	31	18-1/2	8-3/4	6-3/4	26-1/2	4-1/8	26-1/2	1	2
3-IBT.800-400-400-G18	181-3/4	57-3/4	57-1/16	51-13/16	5-1/4	34-3/16	10-3/4	2-11/16	N/A	N/A	102-3/16	84	35	4-1/2	44	20	57-1/4	27-1/2	31	18-1/2	8-3/4	6-3/4	26-1/2	4-1/8	26-1/2	1	2
3-IBT.1000-300-300-400-G18	241-7/8	57-3/4	57-1/16	51-13/16	5-1/4	34-3/16	10-3/4	2-11/16	62-13/16	117-1/16	162-5/16	84	35	4-1/2	44	20	57-1/4	27-1/2	31	18-1/2	8-3/4	6-3/4	26-1/2	4-1/8	26-1/2	1	3
3-IBT.1200-400-400-400-G18	241-7/8	57-3/4	57-1/16	51-13/16	5-1/4	34-3/16	10-3/4	2-11/16	62-13/16	117-1/16	162-5/16	84	35	4-1/2	44	20	57-1/4	27-1/2	31	18-1/2	8-3/4	6-3/4	26-1/2	4-1/8	26-1/2	1	3
4-IBT.400-920	195-1/16	57-3/4	57-1/16	51-13/16	5-1/4	47-1/4	10-3/4	2-11/16	N/A	N/A	121-1/4	42	42	4-1/2	41-1/8	23-1/2	52-7/8	28-1/2	34	18-1/2	8-3/4	8-1/2	26-1/2	4-1/8	26-1/2	1	1
4-IBT.800-400-400-920	195-1/16	57-3/4	57-1/16	51-13/16	5-1/4	47-1/4	10-3/4	2-11/16	N/A	N/A	121-1/4	42	42	4-1/2	41-1/8	23-1/2	52-7/8	28-1/2	34	18-1/2	8-3/4	8-1/2	26-1/2	4-1/8	26-1/2	1	2
4-IBT.1000-300-300-400-920	255-3/16	57-3/4	57-1/16	51-13/16	5-1/4	47-1/4	10-3/4	2-11/16	62-13/16	117-1/16	181-3/8	42	42	4-1/2	41-1/8	23-1/2	52-7/8	28-1/2	34	18-1/2	8-3/4	8-1/2	26-1/2	4-1/8	26-1/2	1	3
4-IBT.1200-400-400-400-920	255-3/16	57-3/4	57-1/16	51-13/16	5-1/4	47-1/4	10-3/4	2-11/16	62-13/16	117-1/16	181-3/8	42	42	4-1/2	41-1/8	23-1/2	52-7/8	28-1/2	34	18-1/2	8-3/4	8-1/2	26-1/2	4-1/8	26-1/2	1	3
4-IBT.1400-300-300-400-400-920	255-3/16	57-3/4	57-1/16	51-13/16	5-1/4	47-1/4	10-3/4	2-11/16	62-13/16	117-1/16	181-3/8	42	42	4-1/2	41-1/8	23-1/2	52-7/8	28-1/2	34	18-1/2	8-3/4	8-1/2	26-1/2	4-1/8	26-1/2	1	4
4-IBT.1600-400-400-400-400-920	255-3/16	57-3/4	57-1/16	51-13/16	5-1/4	47-1/4	10-3/4	2-11/16	62-13/16	117-1/16	181-3/8	42	42	4-1/2	41-1/8	23-1/2	52-7/8	28-1/2	34	18-1/2	8-3/4	8-1/2	26-1/2	4-1/8	26-1/2	1	4
5-IBT.400-925	205-1/16	66-3/8	59-15/16	54-11/16	5-1/4	49-5/8	10-3/4	2-11/16	N/A	N/A	131-1/4	52-3/4	52-3/4	4-1/2	41-1/8	28-7/8	52-7/8	31-1/2	34	18-1/2	8-3/4	10-3/4	32	3-1/8	27-1/2	1	1
5-IBT.800-400-400-925	205-1/16	66-3/8	59-15/16	54-11/16	5-1/4	49-5/8	10-3/4	2-11/16	N/A	N/A	131-1/4	52-3/4	52-3/4	4-1/2	41-1/8	28-7/8	52-7/8	31-1/2	34	18-1/2	8-3/4	10-3/4	32	3-1/8	27-1/2	1	2
5-IBT.1000-300-300-400-925	265-3/16	66-3/8	59-15/16	54-11/16	5-1/4	49-5/8	10-3/4	2-11/16	62-13/16	117-1/16	191-3/8	52-3/4	52-3/4	4-1/2	41-1/8	28-7/8	52-7/8	31-1/2	34	18-1/2	8-3/4	10-3/4	32	3-1/8	27-1/2	1	3
5-IBT.1200-400-400-400-925	265-3/16	66-3/8	59-15/16	54-11/16	5-1/4	49-5/8	10-3/4	2-11/16	62-13/16	117-1/16	191-3/8	52-3/4	52-3/4	4-1/2	41-1/8	28-7/8	52-7/8	31-1/2	34	18-1/2	8-3/4	10-3/4	32	3-1/8	27-1/2	1	3
5-IBT.1400-300-300-400-400-925	265-3/16	66-3/8	59-15/16	54-11/16	5-1/4	49-5/8	10-3/4	2-11/16	62-13/16	117-1/16	191-3/8	52-3/4	52-3/4	4-1/2	41-1/8	28-7/8	52-7/8	31-1/2	34	18-1/2	8-3/4	10-3/4	32	3-1/8	27-1/2	1	4
5-IBT.1600-400-400-400-400-925	265-3/16	66-3/8	59-15/16	54-11/16	5-1/4	49-5/8	10-3/4	2-11/16	62-13/16	117-1/16	191-3/8	52-3/4	52-3/4	4-1/2	41-1/8	28-7/8	52-7/8	31-1/2	34	18-1/2	8-3/4	10-3/4	32	3-1/8	27-1/2	1	4

* ADDITIONAL RAIL/GAS CONNECTION ONLY FOR UNITS WITH 3 OR 4 FURNACES

**ALL MODELS ARE FULLY ELECTRONICALLY MODULATING

*** COMBUSTION EFFICIENCY OF EVERY UNIT IS 80.0% OVER THE ENTIRE GAS FIRING RANGE.

**** GAS PRESSURES IN TABLE ARE FOR NATURAL GAS, LP MINIMUM GAS INLET PRESSURE = 11" W.C.

MAX. EVAP WATER PRESSURE = 50 PSI @ 70 DEG. F

UNIT INFORMATION

MODEL	BTU RANGE (MBH)***			TURNDOWN RATIO	COMBUSTION EFFICIENCY****	GAS PRESSURE*****		STANDARD EVAPORATIVE COOLING UNIT					CELDEK EVAPORATIVE COOLING UNIT					V-BANK INFORMATION
	BURNER INPUT	BTU LOW	BTU HIGH			MIN	MAX	TOT. WEIGHT	MEDIA SIZE & QTY	VEL. @ MAX. CFM	NOZZLES	MAX. FLOW RATE	TOT. WEIGHT	MEDIA SIZE & QTY	VEL. @ MAX. CFM	NOZZLES	MAX. FLOW RATE	FILTER SIZE & QTY
1-IBT.150-G10	150	20	120	6	80.0%	7" WC	14" WC	1022 LBS	20"x25"x2" (3)	406 FPM	6	3 GPH	1027 LBS	20"x24"x12"	1050 FPM	12	3.9 GPH	20"x25"x2" (3)
1-IBT.200-G10	200	26.7	160	6	80.0%	7" WC	14" WC	1052 LBS	20"x25"x2" (3)	406 FPM	6	3 GPH	1057 LBS	20"x24"x12"	1050 FPM	12	3.9 GPH	20"x25"x2" (3)
1-IBT.300-150-150-G10	300	20	240	12	80.0%	7" WC	14" WC	1107 LBS	20"x25"x2" (3)	406 FPM	6	3 GPH	1112 LBS	20"x24"x12"	1050 FPM	12	3.9 GPH	20"x25"x2" (3)
1-IBT.400-200-200-G10	400	26.7	320	12	80.0%	7" WC	14" WC	1181 LBS	20"x25"x2" (3)	406 FPM	6	3 GPH	1186 LBS	20"x24"x12"	1050 FPM	12	3.9 GPH	20"x25"x2" (3)
2-IBT.200-G15	200	26.7	160	6	80.0%	7" WC	14" WC	1305 LBS	16"x20"x2" (8)	429 FPM	10	5 GPH	1300 LBS	25"x32"x12"	1080 FPM	20	6.5 GPH	16"x20"x2" (8)
2-IBT.300-G15	300	40	240	6	80.0%	7" WC	14" WC	1397 LBS	16"x20"x2" (8)	429 FPM	10	5 GPH	1392 LBS	25"x32"x12"	1080 FPM	20	6.5 GPH	16"x20"x2" (8)
2-IBT.400-G15	400	53.3	320	6	80.0%	7" WC	14" WC	1476 LBS	16"x20"x2" (8)	429 FPM	10	5 GPH	1471 LBS	25"x32"x12"	1080 FPM	20	6.5 GPH	16"x20"x2" (8)
2-IBT.400-200-200-G15	400	26.7	320	12	80.0%	7" WC	14" WC	1364 LBS	16"x20"x2" (8)	429 FPM	10	5 GPH	1359 LBS	25"x32"x12"	1080 FPM	20	6.5 GPH	16"x20"x2" (8)
2-IBT.600-300-300-G15	600	40	480	12	80.0%	7" WC	14" WC	1518 LBS	16"x20"x2" (8)	429 FPM	10	5 GPH	1513 LBS	25"x32"x12"	1080 FPM	20	6.5 GPH	16"x20"x2" (8)
2-IBT.800-400-400-G15	800	53.3	640	12	80.0%	7" WC	14" WC	1631 LBS	16"x20"x2" (8)	429 FPM	10	5 GPH	1626 LBS	25"x32"x12"	1080 FPM	20	6.5 GPH	16"x20"x2" (8)
3-IBT.400-G18	400	53.3	320	6	80.0%	7" WC	14" WC	1837 LBS	20"x25"x2" (8)	348 FPM	14	7 GPH	1827 LBS	30"x36"x12"	1067 FPM	28	8.4 GPH	20"x25"x2" (8)
3-IBT.600-300-300-G18	600	40	480	12	80.0%	7" WC	14" WC	1955 LBS	20"x25"x2" (8)	348 FPM	14	7 GPH	1945 LBS	30"x36"x12"	1067 FPM	28	8.4 GPH	20"x25"x2" (8)
3-IBT.800-400-400-G18	800	53.3	640	12	80.0%	7" WC	14" WC	2093 LBS	20"x25"x2" (8)	348 FPM	14	7 GPH	2083 LBS	30"x36"x12"	1067 FPM	28	8.4 GPH	20"x25"x2" (8)
3-IBT.1000-300-300-400-G18	1000	40	800	20	80.0%	7" WC	14" WC	2832 LBS	20"x25"x2" (8)	348 FPM	14	7 GPH	2822 LBS	30"x36"x12"	1067 FPM	28	8.4 GPH	20"x25"x2" (8)
3-IBT.1200-400-400-400-G18	1200	53.3	960	18	80.0%	7" WC	14" WC	2944 LBS	20"x25"x2" (8)	348 FPM	14	7 GPH	2934 LBS	30"x36"x12"	1067 FPM	28	8.4 GPH	20"x25"x2" (8)
4-IBT.400-920	400	53.3	320	6	80.0%	7" WC	14" WC	2337 LBS	16"x20"x2" (15)	572 FPM	24	12 GPH	2307 LBS	38"x43"x12"	1322 FPM	35	10.15 GPH	16"x20"x2" (15)
4-IBT.800-400-400-920	800	53.3	640	12	80.0%	7" WC	14" WC	2554 LBS	16"x20"x2" (15)	572 FPM	24	12 GPH	2524 LBS	38"x43"x12"	1322 FPM	35	10.15 GPH	16"x20"x2" (15)
4-IBT.1000-300-300-400-920	1000	40	800	20	80.0%	7" WC	14" WC	3437 LBS	16"x20"x2" (15)	572 FPM	24	12 GPH	3407 LBS	38"x43"x12"	1322 FPM	35	10.15 GPH	16"x20"x2" (15)
4-IBT.1200-400-400-400-920	1200	53.3	960	18	80.0%	7" WC	14" WC	3549 LBS	16"x20"x2" (15)	572 FPM	24	12 GPH	3519 LBS	38"x43"x12"	1322 FPM	35	10.15 GPH	16"x20"x2" (15)
4-IBT.1400-300-300-400-400-920	1400	40	1120	28	80.0%	7" WC	14" WC	3661 LBS	16"x20"x2" (15)	572 FPM	24	12 GPH	3631 LBS	38"x43"x12"	1322 FPM	35	10.15 GPH	16"x20"x2" (15)
4-IBT.1600-400-400-400-400-920	1600	53.3	1280	24	80.0%	7" WC	14" WC	3773 LBS	16"x20"x2" (15)	572 FPM	24	12 GPH	3743 LBS	38"x43"x12"	1322 FPM	35	10.15 GPH	16"x20"x2" (15)
5-IBT.400-925	400	53.3	320	6	80.0%	7" WC	14" WC	2980 LBS	20"x25"x2" (12)	638 FPM	30	15 GPH	2940 LBS	45"x54"x12"	1304 FPM	42	12.6 GPH	20"x25"x2" (12)
5-IBT.800-400-400-925	800	53.3	640	12	80.0%	7" WC	14" WC	3197 LBS	20"x25"x2" (12)	638 FPM	30	15 GPH	3157 LBS	45"x54"x12"	1304 FPM	42	12.6 GPH	20"x25"x2" (12)
5-IBT.1000-300-300-400-925	1000	40	800	20	80.0%	7" WC	14" WC	3969 LBS	20"x25"x2" (12)	638 FPM	30	15 GPH	4929 LBS	45"x54"x12"	1304 FPM	42	12.6 GPH	20"x25"x2" (12)
5-IBT.1200-400-400-400-925	1200	53.3	960	18	80.0%	7" WC	14" WC	4081 LBS	20"x25"x2" (12)	638 FPM	30	15 GPH	4041 LBS	45"x54"x12"	1304 FPM	42	12.6 GPH	20"x25"x2" (12)
5-IBT.1400-300-300-400-400-925	1400	40	1120	28	80.0%	7" WC	14" WC	4193 LBS	20"x25"x2" (12)	638 FPM	30	15 GPH	4153 LBS	45"x54"x12"	1304 FPM	42	12.6 GPH	20"x25"x2" (12)