IHVBMBCCSAHIBTRTP-MPU
REV.#3 06/15/2015

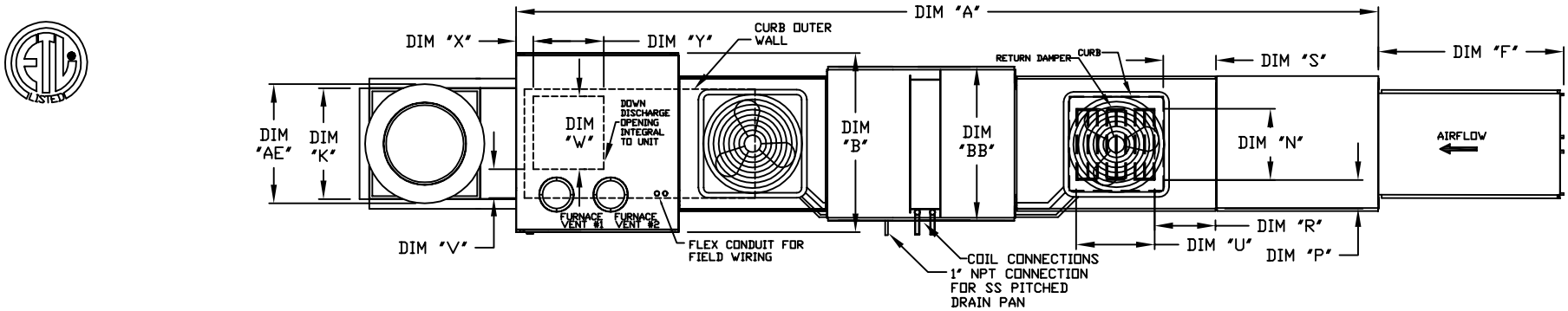

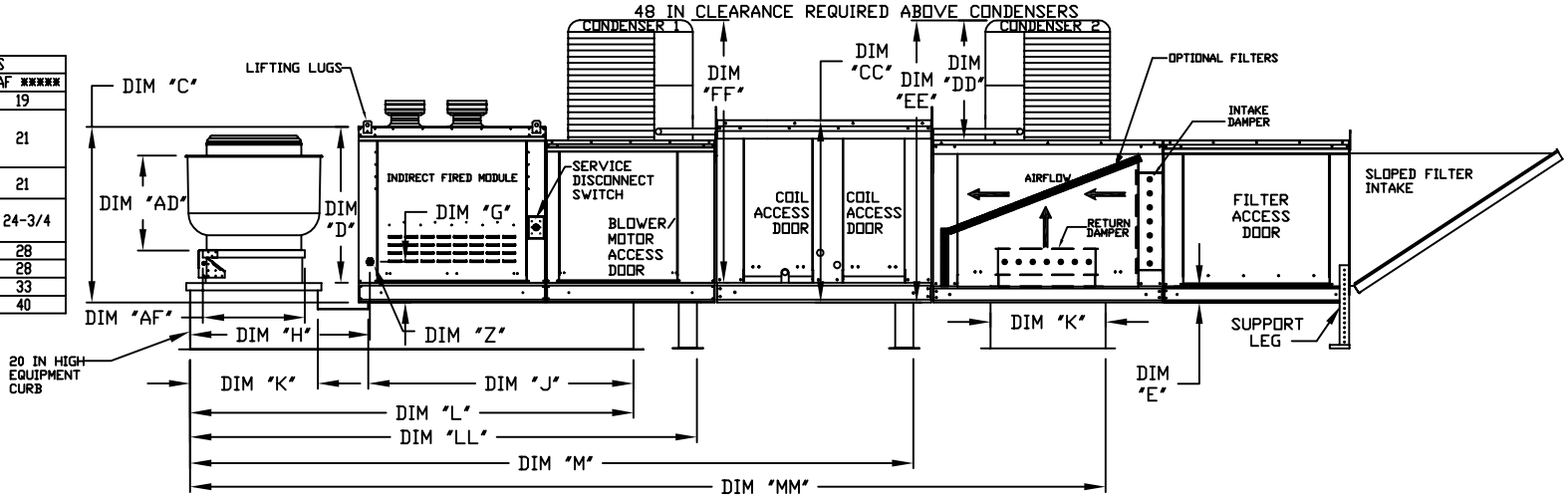

MAX. ROOF OPENING 2" SMALLER THAN CURB OUTSIDE DIMENSION

EXHAUST UNIT DIMENSIONS			
MODEL #	AD	AE	AF *****
DU12HFA	14-1/2	22	19
NCA8FA DU25HFA DU30HFA DU33HFA	18-1/2	27-1/4	21
NCA10FA DU50HFA	21-1/2	30-1/4	21
NCA14FA DU75HFA DU85HFA	23	33-3/4	24-3/4
NCA16FA	23-1/2	39-3/8	28
NCA18FA	29-1/2	38-7/8	28
NCA24FA	30-5/8	43-3/8	33
NCA30FA	33-1/2	52-3/4	40

ALL DIMENSIONS ARE NOMINAL AND GIVEN IN INCHES.

MODEL	WEIGHT (LBS.)	UNIT DIMENSIONS																MIXING BOX OPENING					DOWN DISCHARGE OPENING				GAS CONNECTION	# OF FURNACES
		A	B	BB	C	CC	D	E	F	G	H	J	K	L	LL	M	MM	N	P	R	S	U	V	W	X	Y	"Z" (NPT)	
1-IBT.150-G10	1422	209	49-1/2	39-3/8	39-9/16	42-3/4	35-13/16	3-3/4	44-3/8	8-3/4	36-1/8	71	21	106	124-3/16	166-7/16	197-3/4	14	8	14	12-1/2	18	3	16-3/4	9-1/8	21	3/4	1
1-IBT.200-G10	1452	209	49-1/2	39-3/8	39-9/16	42-3/4	35-13/16	3-3/4	44-3/8	8-3/4	36-1/8	71	21	106	124-3/16	166-7/16	197-3/4	14	8	14	12-1/2	18	3	16-3/4	9-1/8	21	3/4	1
1-IBT.300-150-150-G10	1507	209	49-1/2	39-3/8	39-9/16	42-3/4	35-13/16	3-3/4	44-3/8	8-3/4	36-1/8	71	21	106	124-3/16	166-7/16	197-3/4	14	8	14	12-1/2	18	3	16-3/4	9-1/8	21	3/4	2
1-IBT.400-200-200-G10	1581	209	49-1/2	39-3/8	39-9/16	42-3/4	35-13/16	3-3/4	44-3/8	8-3/4	36-1/8	71	21	106	124-3/16	166-7/16	197-3/4	14	8	14	12-1/2	18	3	16-3/4	9-1/8	21	3/4	2
2-IBT.200-G15	1805	217	49-1/2	49-3/8	39-9/16	47-3/4	35-13/16	3-3/4	53-5/8	8-3/4	46-1/8	79	31	124	142-3/16	184-7/16	220-3/4	22-3/4	8	11	7-1/2	24	5	24	9-1/8	21	1	1
2-IBT.300-G15	1897	217	49-1/2	49-3/8	53-7/8	47-3/4	50-1/8	3-3/4	53-5/8	8-3/4	46-1/8	79	31	124	142-3/16	184-7/16	220-3/4	22-3/4	8	11	7-1/2	24	5	24	9-1/8	21	1	1
2-IBT.400-G15	1976	217	49-1/2	49-3/8	53-7/8	47-3/4	50-1/8	3-3/4	53-5/8	8-3/4	46-1/8	79	31	124	142-3/16	184-7/16	220-3/4	22-3/4	8	11	7-1/2	24	5	24	9-1/8	21	1	1
2-IBT.400-200-200-G15	1864	217	49-1/2	49-3/8	39-9/16	47-3/4	35-13/16	3-3/4	53-5/8	8-3/4	46-1/8	79	31	124	142-3/16	184-7/16	220-3/4	22-3/4	8	11	7-1/2	24	5	24	9-1/8	21	1	2
2-IBT.600-300-300-G15	2018	217	49-1/2	49-3/8	53-7/8	47-3/4	50-1/8	3-3/4	53-5/8	8-3/4	46-1/8	79	31	124	142-3/16	184-7/16	220-3/4	22-3/4	8	11	7-1/2	24	5	24	9-1/8	21	1	2
2-IBT.800-400-400-G15	2131	217	49-1/2	49-3/8	53-7/8	47-3/4	50-1/8	3-3/4	53-5/8	8-3/4	46-1/8	79	31	124	142-3/16	184-7/16	220-3/4	22-3/4	8	11	7-1/2	24	5	24	9-1/8	21	1	2
3-IBT.400-G18	2492	228	57-3/4	54-3/8	57-1/16	56-3/8	51-13/16	5-1/4	51-5/8	10-3/4	50-1/8	84	35	133	151-3/16	193-7/16	232-3/4	28	8	7	4-1/2	30	6-3/4	26-1/2	4-1/8	26-1/2	1	1
3-IBT.600-300-300-G18	2610	228	57-3/4	54-3/8	57-1/16	56-3/8	51-13/16	5-1/4	51-5/8	10-3/4	50-1/8	84	35	133	151-3/16	193-7/16	232-3/4	28	8	7	4-1/2	30	6-3/4	26-1/2	4-1/8	26-1/2	1	2
3-IBT.800-400-400-G18	2748	228	57-3/4	54-3/8	57-1/16	56-3/8	51-13/16	5-1/4	51-5/8	10-3/4	50-1/8	84	35	133	151-3/16	193-7/16	232-3/4	28	8	7	4-1/2	30	6-3/4	26-1/2	4-1/8	26-1/2	1	2

UNIT INFORMATION

MODEL	BTU RANGE (MBH)**			TURNDOWN RATIO	COMBUSTION EFFICIENCY***	GAS PRESSURE****	
	BURNER INPUT	BTU LOW	BTU HIGH			MIN	MAX
1-IBT.150-G10	150	20	120	6	80.0%	7" WC	14" WC
1-IBT.200-G10	200	26.7	160	6	80.0%	7" WC	14" WC
1-IBT.300-150-150-G10	300	20	240	12	80.0%	7" WC	14" WC
1-IBT.400-200-200-G10	400	26.7	320	12	80.0%	7" WC	14" WC
2-IBT.200-G15	200	26.7	160	6	80.0%	7" WC	14" WC
2-IBT.300-G15	300	40	240	6	80.0%	7" WC	14" WC
2-IBT.400-G15	400	53.3	320	6	80.0%	7" WC	14" WC
2-IBT.400-200-200-G15	400	26.7	320	12	80.0%	7" WC	14" WC
2-IBT.600-300-300-G15	600	40	480	12	80.0%	7" WC	14" WC
2-IBT.800-400-400-G15	800	53.3	640	12	80.0%	7" WC	14" WC
3-IBT.400-G18	400	53.3	320	6	80.0%	7" WC	14" WC
3-IBT.600-300-300-G18	600	40	480	12	80.0%	7" WC	14" WC
3-IBT.800-400-400-G18	800	53.3	640	12	80.0%	7" WC	14" WC

MODEL	OPTIONAL MIXING BOX FILTERS FILTER SIZE & QTY
G10	10"x16"x2" (5)
G15	20"x25"x2" (2), 16"x25"x2" (1)
G18	15"x20"x2" (4), 15"x15"x2" (2)

* ADD CONDENSING UNIT WEIGHT TO WEIGHT IN TABLE ABOVE

** ALL MODELS ARE FULLY ELECTRONICALLY MODULATING

*** COMBUSTION EFFICIENCY OF EVERY UNIT IS 80.0% OVER THE ENTIRE GAS FIRING RANGE.

**** GAS PRESSURES IN TABLE ARE FOR NATURAL GAS, LP MINIMUM GAS INLET PRESSURE = 11" W.C.

***** 9 INCH HIGH EXHAUST ADAPTER MAY BE REQUIRED

CONDENSER INFORMATION						
MODEL	WEIGHT*	TONNAGE #1	TONNAGE #2	CC	DD	EE
2 TON-G10	119 LBS	2 TON	N/A	26-5/16	56-1/16	52-3/8
3 TON-G10	134 LBS	3 TON	N/A	33-5/16	63-1/16	59-3/8
5 TON-G10	253 LBS	2 TON	3 TON	33-5/16	63-1/16	59-3/8
5 TON-G10	302 LBS	2.5 TON	2.5TON	32-13/16	62-9/16	58-7/8
5 TON-G15	197 LBS	5 TON	N/A	32-13/16	69-9/16	65-7/8
7.5 TON-G15	348 LBS	2.5 TON	5 TON	32-13/16	69-9/16	65-7/8
8 TON-G15	331 LBS	3 TON	5 TON	33-5/16	71-11/16	68
10 TON-G15	394 LBS	5 TON	5 TON	32-13/16	69-9/16	65-7/8
10 TON-G18	394 LBS	5 TON	5 TON	32-13/16	76-3/16	70-7/8
10 TON-920	394 LBS	5 TON	5 TON	32-13/16	97-3/16	91-15/16

R410A REFRIGERANT