REV.00 02/05/2016

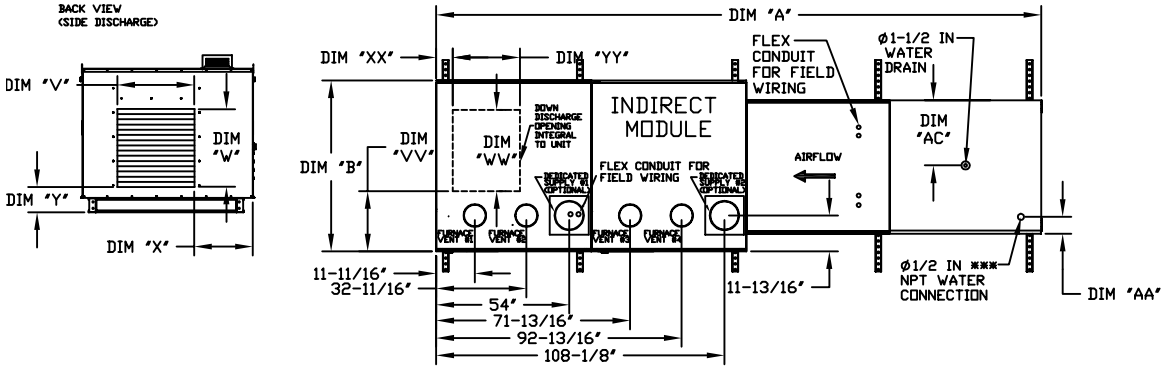

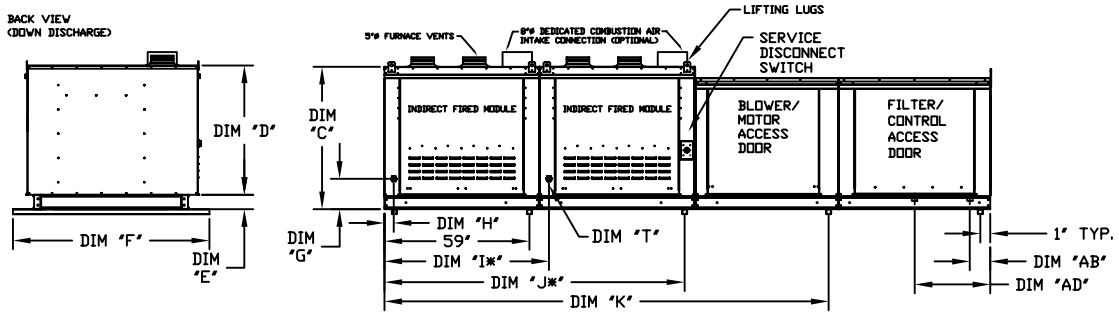

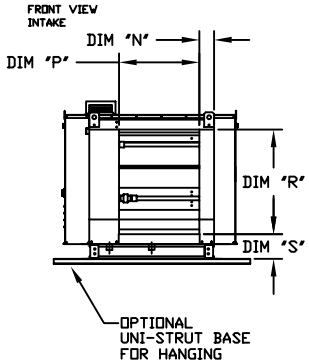

ALL DIMENSIONS ARE NOMINAL AND GIVEN IN INCHES.

MODEL	UNIT DIMENSIONS											INTAKE OPENING				SIDE DISCHARGE OPENING				DOWN DISCHARGE OPENING				GAS CONNECTION	# OF FURNACES	WATER INLET		DRAIN OPENING	
	A	B	C	D	E	F	G	H	I*	J*	K	N	P	R	S	V	W	X	Y	VV	WW	XX	YY	"Y" (NPT)		AA	AB	AC	AD
1-IBT.150-G10	124-1/2	49-1/2	39-9/16	35-13/16	3-3/4	60	8-3/4	2-11/16	N/A	N/A	91-1/4	3-1/8	16-3/4	21-7/8	5-3/4	17-3/4	17-3/4	18-1/2	7-1/4	3	16-3/4	3-1/8	21	3/4	1	4-1/2	6-1/4	13	16
1-IBT.200-G10	124-1/2	49-1/2	39-9/16	35-13/16	3-3/4	60	8-3/4	2-11/16	N/A	N/A	91-1/4	3-1/8	16-3/4	21-7/8	5-3/4	17-3/4	17-3/4	18-1/2	7-1/4	3	16-3/4	3-1/8	21	3/4	1	4-1/2	6-1/4	13	16
1-IBT.300-150-150-G10	124-1/2	49-1/2	39-9/16	35-13/16	3-3/4	60	8-3/4	2-11/16	N/A	N/A	91-1/4	3-1/8	16-3/4	21-7/8	5-3/4	17-3/4	17-3/4	18-1/2	7-1/4	3	16-3/4	3-1/8	21	3/4	2	4-1/2	6-1/4	13	16
1-IBT.400-200-200-G10	124-1/2	49-1/2	39-9/16	35-13/16	3-3/4	60	8-3/4	2-11/16	N/A	N/A	91-1/4	3-1/8	16-3/4	21-7/8	5-3/4	17-3/4	17-3/4	18-1/2	7-1/4	3	16-3/4	3-1/8	21	3/4	2	4-1/2	6-1/4	13	16
2-IBT.200-G15	132-1/2	49-1/2	39-9/16	35-13/16	3-3/4	60	8-3/4	2-11/16	N/A	N/A	99-1/4	5-1/8	24-3/4	28-7/8	5-3/4	24-1/2	17-3/4	18-1/2	7-1/4	5	24	3-1/8	21	1	1	4-1/2	6-1/4	18	16
2-IBT.300-G15	132-1/2	49-1/2	53-7/8	50-1/8	3-3/4	60	8-3/4	2-11/16	N/A	N/A	99-1/4	5-1/8	24-3/4	28-7/8	5-3/4	24-1/2	24-1/2	18-1/2	7-1/4	5	24	3-1/8	21	1	1	4-1/2	6-1/4	18	16
2-IBT.400-G15	132-1/2	49-1/2	53-7/8	50-1/8	3-3/4	60	8-3/4	2-11/16	N/A	N/A	99-1/4	5-1/8	24-3/4	28-7/8	5-3/4	24-1/2	24-1/2	18-1/2	7-1/4	5	24	3-1/8	21	1	1	4-1/2	6-1/4	18	16
2-IBT.400-200-200-G15	132-1/2	49-1/2	39-9/16	35-13/16	3-3/4	60	8-3/4	2-11/16	N/A	N/A	99-1/4	5-1/8	24-3/4	28-7/8	5-3/4	24-1/2	17-3/4	18-1/2	7-1/4	5	24	3-1/8	21	1	2	4-1/2	6-1/4	18	16
2-IBT.600-300-300-G15	132-1/2	49-1/2	53-7/8	50-1/8	3-3/4	60	8-3/4	2-11/16	N/A	N/A	99-1/4	5-1/8	24-3/4	28-7/8	5-3/4	24-1/2	24-1/2	18-1/2	7-1/4	5	24	3-1/8	21	1	2	4-1/2	6-1/4	18	16
2-IBT.800-400-400-G15	132-1/2	49-1/2	53-7/8	50-1/8	3-3/4	60	8-3/4	2-11/16	N/A	N/A	99-1/4	5-1/8	24-3/4	28-7/8	5-3/4	24-1/2	24-1/2	18-1/2	7-1/4	5	24	3-1/8	21	1	2	4-1/2	6-1/4	18	16
3-IBT.400-G18	143-1/2	57-3/4	57-1/16	51-13/16	5-1/4	72	10-3/4	2-11/16	N/A	N/A	104-1/8	4-5/8	29-1/4	33-7/8	7-1/2	27-1/2	31	18-1/2	8-3/4	6-3/4	26-1/2	4-1/8	26-1/2	1	1	4-1/2	5-3/4	20	19
3-IBT.600-300-300-G18	143-1/2	57-3/4	57-1/16	51-13/16	5-1/4	72	10-3/4	2-11/16	N/A	N/A	104-1/8	4-5/8	29-1/4	33-7/8	7-1/2	27-1/2	31	18-1/2	8-3/4	6-3/4	26-1/2	4-1/8	26-1/2	1	2	4-1/2	5-3/4	20	19
3-IBT.800-400-400-G18	143-1/2	57-3/4	57-1/16	51-13/16	5-1/4	72	10-3/4	2-11/16	N/A	N/A	104-1/8	4-5/8	29-1/4	33-7/8	7-1/2	27-1/2	31	18-1/2	8-3/4	6-3/4	26-1/2	4-1/8	26-1/2	1	2	4-1/2	5-3/4	20	19
3-IBT.1000-300-300-400-G18	203-5/8	57-3/4	57-1/16	51-13/16	5-1/4	72	10-3/4	2-11/16	62-13/16	119-1/8	164-1/4	4-5/8	29-1/4	33-7/8	7-1/2	27-1/2	31	18-1/2	8-3/4	6-3/4	26-1/2	4-1/8	26-1/2	1	3	4-1/2	5-3/4	20	19
3-IBT.1200-400-400-400-G18	203-5/8	57-3/4	57-1/16	51-13/16	5-1/4	72	10-3/4	2-11/16	62-13/16	119-1/8	164-1/4	4-5/8	29-1/4	33-7/8	7-1/2	27-1/2	31	18-1/2	8-3/4	6-3/4	26-1/2	4-1/8	26-1/2	1	3	4-1/2	5-3/4	20	19
4-IBT.400-920	159-11/16	57-3/4	57-1/16	51-13/16	5-1/4	72	10-3/4	2-11/16	N/A	N/A	123-3/16	4-5/8	36-1/4	41-7/8	7-1/2	28-1/2	34	18-1/2	8-3/4	8-1/2	26-1/2	4-1/8	26-1/2	1	1	4-1/2	5-3/4	23-1/2	17-1/2
4-IBT.800-400-400-920	159-11/16	57-3/4	57-1/16	51-13/16	5-1/4	72	10-3/4	2-11/16	N/A	N/A	123-3/16	4-5/8	36-1/4	41-7/8	7-1/2	28-1/2	34	18-1/2	8-3/4	8-1/2	26-1/2	4-1/8	26-1/2	1	2	4-1/2	5-3/4	23-1/2	17-1/2
4-IBT.1000-300-300-400-920	219-13/16	57-3/4	57-1/16	51-13/16	5-1/4	72	10-3/4	2-11/16	62-13/16	119-1/8	183-5/16	4-5/8	36-1/4	41-7/8	7-1/2	28-1/2	34	18-1/2	8-3/4	8-1/2	26-1/2	4-1/8	26-1/2	1	3	4-1/2	5-3/4	23-1/2	17-1/2
4-IBT.1200-400-400-400-920	219-13/16	57-3/4	57-1/16	51-13/16	5-1/4	72	10-3/4	2-11/16	62-13/16	119-1/8	183-5/16	4-5/8	36-1/4	41-7/8	7-1/2	28-1/2	34	18-1/2	8-3/4	8-1/2	26-1/2	4-1/8	26-1/2	1	3	4-1/2	5-3/4	23-1/2	17-1/2
4-IBT.1400-300-300-400-400-920	219-13/16	57-3/4	57-1/16	51-13/16	5-1/4	72	10-3/4	2-11/16	62-13/16	119-1/8	183-5/16	4-5/8	36-1/4	41-7/8	7-1/2	28-1/2	34	18-1/2	8-3/4	8-1/2	26-1/2	4-1/8	26-1/2	1	4	4-1/2	5-3/4	23-1/2	17-1/2
4-IBT.1600-400-400-400-400-920	219-13/16	57-3/4	57-1/16	51-13/16	5-1/4	72	10-3/4	2-11/16	62-13/16	119-1/8	183-5/16	4-5/8	36-1/4	41-7/8	7-1/2	28-1/2	34	18-1/2	8-3/4	8-1/2	26-1/2	4-1/8	26-1/2	1	4	4-1/2	5-3/4	23-1/2	17-1/2
5-IBT.400-925	169-11/16	66-3/8	59-15/16	54-11/16	5-1/4	72	10-3/4	2-11/16	N/A	N/A	134-3/16	4-5/8	47	48-7/8	7-1/2	31-1/2	34	18-1/2	8-3/4	10-3/4	32	3-1/8	27-1/2	1	1	4-1/2	5-3/4	28-7/8	17-1/2
5-IBT.800-400-400-925	169-11/16	66-3/8	59-15/16	54-11/16	5-1/4	72	10-3/4	2-11/16	N/A	N/A	134-3/16	4-5/8	47	48-7/8	7-1/2	31-1/2	34	18-1/2	8-3/4	10-3/4	32	3-1/8	27-1/2	1	2	4-1/2	5-3/4	28-7/8	17-1/2
5-IBT.1000-300-300-400-925	229-13/16	66-3/8	59-15/16	54-11/16	5-1/4	72	10-3/4	2-11/16	62-13/16	119-1/8	193-5/16	4-5/8	47	48-7/8	7-1/2	31-1/2	34	18-1/2	8-3/4	10-3/4	32	3-1/8	27-1/2	1	3	4-1/2	5-3/4	28-7/8	17-1/2
5-IBT.1200-400-400-400-925	229-13/16	66-3/8	59-15/16	54-11/16	5-1/4	72	10-3/4	2-11/16	62-13/16	119-1/8	193-5/16	4-5/8	47	48-7/8	7-1/2	31-1/2	34	18-1/2	8-3/4	10-3/4	32	3-1/8	27-1/2	1	3	4-1/2	5-3/4	28-7/8	17-1/2
5-IBT.1400-300-300-400-400-925	229-13/16	66-3/8	59-15/16	54-11/16	5-1/4	72	10-3/4	2-11/16	62-13/16	119-1/8	193-5/16	4-5/8	47	48-7/8	7-1/2	31-1/2	34	18-1/2	8-3/4	10-3/4	32	3-1/8	27-1/2	1	4	4-1/2	5-3/4	28-7/8	17-1/2
5-IBT.1600-400-400-400-400-925	229-13/16	66-3/8	59-15/16	54-11/16	5-1/4	72	10-3/4	2-11/16	62-13/16	119-1/8	193-5/16	4-5/8	47	48-7/8	7-1/2	31-1/2	34	18-1/2	8-3/4	10-3/4	32	3-1/8	27-1/2	1	4	4-1/2	5-3/4	28-7/8	17-1/2

* ADDITIONAL UNI-STRUT/GAS CONNECTION ONLY FOR UNITS WITH 3 OR 4 FURNACES

**ALL MODELS ARE FULLY ELECTRONICALLY MODULATING

*** COMBUSTION EFFICIENCY OF EVERY UNIT IS 80.0% OVER THE ENTIRE GAS FIRING RANGE.

**** GAS PRESSURES IN TABLE ARE FOR NATURAL GAS, LP MINIMUM GAS INLET PRESSURE = 11" W.C.

MAX. EVAP WATER PRESSURE = 50 PSI @ 70 DEG. F

UNIT INFORMATION

MODEL	BTU RANGE (MBH)***			TURNDOWN RATIO	COMBUSTION EFFICIENCY****	GAS PRESSURE*****	
	BURNER INPUT	BTU LOW	BTU HIGH			MIN	MAX
1-IBT.150-G10	150	20	120	6	80.0%	7" WC	14" WC
1-IBT.200-G10	200	26.7	160	6	80.0%	7" WC	14" WC
1-IBT.300-150-150-G10	300	20	240	12	80.0%	7" WC	14" WC
1-IBT.400-200-200-G10	400	26.7	320	12	80.0%	7" WC	14" WC
2-IBT.200-G15	200	26.7	160	6	80.0%	7" WC	14" WC
2-IBT.300-G15	300	40	240	6	80.0%	7" WC	14" WC
2-IBT.400-G15	400	53.3	320	6	80.0%	7" WC	14" WC
2-IBT.400-200-200-G15	400	26.7	320	12	80.0%	7" WC	14" WC
2-IBT.600-300-300-G15	600	40	480	12	80.0%	7" WC	14" WC
2-IBT.800-400-400-G15	800	53.3	640	12	80.0%	7" WC	14" WC
3-IBT.400-G18	400	53.3	320	6	80.0%	7" WC	14" WC
3-IBT.600-300-300-G18	600	40	480	12	80.0%	7" WC	14" WC
3-IBT.800-400-400-G18	800	53.3	640	12	80.0%	7" WC	14" WC
3-IBT.1000-300-300-400-G18	1000	40	800	20	80.0%	7" WC	14" WC
3-IBT.1200-400-400-400-G18	1200	53.3	960	18	80.0%	7" WC	14" WC
4-IBT.400-920	400	53.3	320	6	80.0%	7" WC	14" WC
4-IBT.800-400-400-920	800	53.3	640	12	80.0%	7" WC	14" WC
4-IBT.1000-300-300-400-920	1000	40	800	20	80.0%	7" WC	14" WC
4-IBT.1200-400-400-400-920	1200	53.3	960	18	80.0%	7" WC	14" WC
4-IBT.1400-300-300-400-400-920	1400	40	1120	28	80.0%	7" WC	14" WC
4-IBT.1600-400-400-400-400-920	1600	53.3	1280	24	80.0%	7" WC	14" WC
5-IBT.400-925	400	53.3	320	6	80.0%	7" WC	14" WC
5-IBT.800-400-400-925	800	53.3	640	12	80.0%	7" WC	14" WC
5-IBT.1000-300-300-400-925	1000	40	800	20	80.0%	7" WC	14" WC
5-IBT.1200-400-400-400-925	1200	53.3	960	18	80.0%	7" WC	14" WC
5-IBT.1400-300-300-400-400-925	1400	40	1120	28	80.0%	7" WC	14" WC
5-IBT.1600-400-400-400-400-925	1600	53.3	1280	24	80.0%	7" WC	14" WC

STANDARD EVAPORATIVE COOLING UNIT				
TOT. WEIGHT	MEDIA SIZE & QTY	VEL. @ MAX. CFM	NOZZLES	MAX. FLOW RATE
902 LBS	20"x25"x2" (3)	406 FPM	6	3 GPH
938 LBS	20"x25"x2" (3)	406 FPM	6	3 GPH
987 LBS	20"x25"x2" (3)	406 FPM	6	3 GPH
1061 LBS	20"x25"x2" (3)	406 FPM	6	3 GPH
1135 LBS	16"x20"x2" (8)	429 FPM	10	5 GPH
1227 LBS	16"x20"x2" (8)	429 FPM	10	5 GPH
1306 LBS	16"x20"x2" (8)	429 FPM	10	5 GPH
1194 LBS	16"x20"x2" (8)	429 FPM	10	5 GPH
1348 LBS	16"x20"x2" (8)	429 FPM	10	5 GPH
1461 LBS	16"x20"x2" (8)	429 FPM	10	5 GPH
1622 LBS	20"x25"x2" (8)	348 FPM	14	7 GPH
1740 LBS	20"x25"x2" (8)	348 FPM	14	7 GPH
1878 LBS	20"x25"x2" (8)	348 FPM	14	7 GPH
2617 LBS	20"x25"x2" (8)	348 FPM	14	7 GPH
2729 LBS	20"x25"x2" (8)	348 FPM	14	7 GPH
2002 LBS	20"x25"x2" (8)	348 FPM	14	7 GPH
2219 LBS	16"x20"x2" (15)	572 FPM	24	12 GPH
3192 LBS	16"x20"x2" (15)	572 FPM	24	12 GPH
3214 LBS	16"x20"x2" (15)	572 FPM	24	12 GPH
3326 LBS	16"x20"x2" (15)	572 FPM	24	12 GPH
3438 LBS	16"x20"x2" (15)	572 FPM	24	12 GPH
2767 LBS	20"x25"x2" (12)	638 FPM	30	15 GPH
2550 LBS	20"x25"x2" (12)	638 FPM	30	15 GPH
3539 LBS	20"x25"x2" (12)	638 FPM	30	15 GPH
3651 LBS	20"x25"x2" (12)	638 FPM	30	15 GPH
3763 LBS	20"x25"x2" (12)	638 FPM	30	15 GPH
[illegible]	[illegible]	[illegible]	[illegible]	[illegible]

CELDEK EVAPORATIVE COOLING UNIT				
TOT. WEIGHT	MEDIA SIZE & QTY	VEL. @ MAX. CFM	NOZZLES	MAX. FLOW RATE
907 LBS	20"x24"x12"	1050 FPM	12	3.9 GPH
937 LBS	20"x24"x12"	1050 FPM	12	3.9 GPH
992 LBS	20"x24"x12"	1050 FPM	12	3.9 GPH
1066 LBS	20"x24"x12"	1050 FPM	12	3.9 GPH
1130 LBS	25"x32"x12"	1080 FPM	20	6.5 GPH
1222 LBS	25"x32"x12"	1080 FPM	20	6.5 GPH
1301 LBS	25"x32"x12"	1080 FPM	20	6.5 GPH
1189 LBS	25"x32"x12"	1080 FPM	20	6.5 GPH
1343 LBS	25"x32"x12"	1080 FPM	20	6.5 GPH
1456 LBS	25"x32"x12"	1080 FPM	20	6.5 GPH
1612 LBS	30"x36"x12"	1067 FPM	28	8.4 GPH
1730 LBS	30"x36"x12"	1067 FPM	28	8.4 GPH
1868 LBS	30"x36"x12"	1067 FPM	28	8.4 GPH
2607 LBS	30"x36"x12"	1067 FPM	28	8.4 GPH
2719 LBS	30"x36"x12"	1067 FPM	28	8.4 GPH
1972 LBS	30"x36"x12"	1067 FPM	28	8.4 GPH
2189 LBS	38"x43"x12"	1322 FPM	35	10.15 GPH
3072 LBS	38"x43"x12"	1322 FPM	35	10.15 GPH
3184 LBS	38"x43"x12"	1322 FPM	35	10.15 GPH
3296 LBS	38"x43"x12"	1322 FPM	35	10.15 GPH
3408 LBS	38"x43"x12"	1322 FPM	35	10.15 GPH
2727 LBS	45"x54"x12"	1304 FPM	42	12.6 GPH
2510 LBS	45"x54"x12"	1304 FPM	42	12.6 GPH
3499 LBS	45"x54"x12"	1304 FPM	42	12.6 GPH
3611 LBS	45"x54"x12"	1304 FPM	42	12.6 GPH
3723 LBS	45"x54"x12"	1304 FPM	42	12.6 GPH
[illegible]	[illegible]	[illegible]	[illegible]	[illegible]