REV.#0 02/05/2016

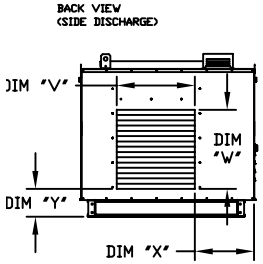

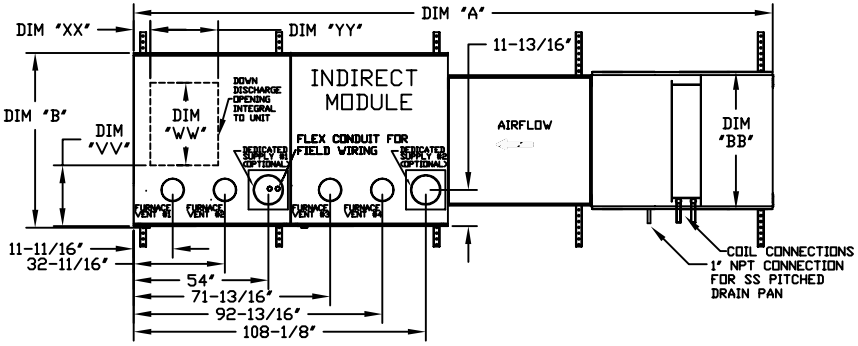

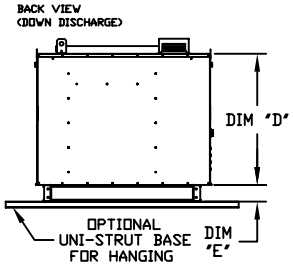

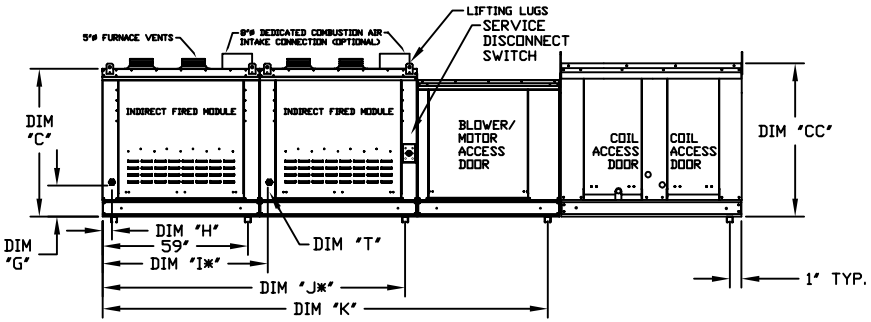

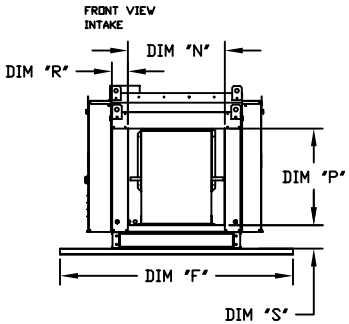

ALL DIMENSIONS ARE NOMINAL AND GIVEN IN INCHES.

MODEL	WEIGHT (LBS)	UNIT DIMENSIONS													INTAKE OPENING				SIDE DISCHARGE OPENING				DOWN DISCHARGE OPENING				GAS CONNECTION "T" (NPT)	# OF FURNACES
		A	B	BB	C	CC	D	E	F	G	H	I*	J*	K	N	P	R	S	V	W	X	Y	VV	WW	XX	YY		
1-IBT.150-G10	1127	134-1/2	49-1/2	39-3/8	39-9/16	42-3/4	35-13/16	3-3/4	60	8-3/4	2-11/16	N/A	N/A	91-1/4	16	18	5-1/16	5-3/4	17-3/4	17-3/4	18-1/2	7-1/4	3	16-3/4	3-1/8	21	3/4	1
1-IBT.200-G10	1157	134-1/2	49-1/2	39-3/8	39-9/16	42-3/4	35-13/16	3-3/4	60	8-3/4	2-11/16	N/A	N/A	91-1/4	16	18	5-1/16	5-3/4	17-3/4	17-3/4	18-1/2	7-1/4	3	16-3/4	3-1/8	21	3/4	1
1-IBT.300-150-150-G10	1212	134-1/2	49-1/2	39-3/8	39-9/16	42-3/4	35-13/16	3-3/4	60	8-3/4	2-11/16	N/A	N/A	91-1/4	16	18	5-1/16	5-3/4	17-3/4	17-3/4	18-1/2	7-1/4	3	16-3/4	3-1/8	21	3/4	2
1-IBT.400-200-200-G10	1286	134-1/2	49-1/2	39-3/8	39-9/16	42-3/4	35-13/16	3-3/4	60	8-3/4	2-11/16	N/A	N/A	91-1/4	16	18	5-1/16	5-3/4	17-3/4	17-3/4	18-1/2	7-1/4	3	16-3/4	3-1/8	21	3/4	2
2-IBT.200-G15	1390	142-1/2	49-1/2	49-3/8	39-9/16	47-3/4	35-13/16	3-3/4	60	8-3/4	2-11/16	N/A	N/A	99-1/4	22-3/4	24	6-11/16	5-3/4	24-1/2	17-3/4	18-1/2	7-1/4	5	24	3-1/8	21	1	1
2-IBT.300-G15	1482	142-1/2	49-1/2	49-3/8	53-7/8	47-3/4	50-1/8	3-3/4	60	8-3/4	2-11/16	N/A	N/A	99-1/4	22-3/4	24	6-11/16	5-3/4	24-1/2	24-1/2	18-1/2	7-1/4	5	24	3-1/8	21	1	1
2-IBT.400-G15	1561	142-1/2	49-1/2	49-3/8	53-7/8	47-3/4	50-1/8	3-3/4	60	8-3/4	2-11/16	N/A	N/A	99-1/4	22-3/4	24	6-11/16	5-3/4	24-1/2	24-1/2	18-1/2	7-1/4	5	24	3-1/8	21	1	1
2-IBT.400-200-200-G15	1449	142-1/2	49-1/2	49-3/8	39-9/16	47-3/4	35-13/16	3-3/4	60	8-3/4	2-11/16	N/A	N/A	99-1/4	22-3/4	24	6-11/16	5-3/4	24-1/2	17-3/4	18-1/2	7-1/4	5	24	3-1/8	21	1	2
2-IBT.600-300-300-G15	1603	142-1/2	49-1/2	49-3/8	53-7/8	47-3/4	50-1/8	3-3/4	60	8-3/4	2-11/16	N/A	N/A	99-1/4	22-3/4	24	6-11/16	5-3/4	24-1/2	24-1/2	18-1/2	7-1/4	5	24	3-1/8	21	1	2
2-IBT.800-400-400-G15	1716	142-1/2	49-1/2	49-3/8	53-7/8	47-3/4	50-1/8	3-3/4	60	8-3/4	2-11/16	N/A	N/A	99-1/4	22-3/4	24	6-11/16	5-3/4	24-1/2	24-1/2	18-1/2	7-1/4	5	24	3-1/8	21	1	2
3-IBT.400-G18	1957	147-1/2	57-3/4	54-3/8	57-1/16	56-3/8	51-13/16	5-1/4	72	10-3/4	2-11/16	N/A	N/A	104-1/8	30	30	5-1/16	7-1/2	27-1/2	31	18-1/2	8-3/4	6-3/4	26-1/2	4-1/8	26-1/2	1	1
3-IBT.600-300-300-G18	2075	147-1/2	57-3/4	54-3/8	57-1/16	56-3/8	51-13/16	5-1/4	72	10-3/4	2-11/16	N/A	N/A	104-1/8	30	30	5-1/16	7-1/2	27-1/2	31	18-1/2	8-3/4	6-3/4	26-1/2	4-1/8	26-1/2	1	2
3-IBT.800-400-400-G18	2213	147-1/2	57-3/4	54-3/8	57-1/16	56-3/8	51-13/16	5-1/4	72	10-3/4	2-11/16	N/A	N/A	104-1/8	30	30	5-1/16	7-1/2	27-1/2	31	18-1/2	8-3/4	6-3/4	26-1/2	4-1/8	26-1/2	1	2
3-IBT.1000-300-300-400-G18	2952	207-5/8	57-3/4	54-3/8	57-1/16	56-3/8	51-13/16	5-1/4	72	10-3/4	2-11/16	62-13/16	119-1/8	164-1/4	30	30	5-1/16	7-1/2	27-1/2	31	18-1/2	8-3/4	6-3/4	26-1/2	4-1/8	26-1/2	1	3
3-IBT.1200-400-400-400-G18	3064	207-5/8	57-3/4	54-3/8	57-1/16	56-3/8	51-13/16	5-1/4	72	10-3/4	2-11/16	62-13/16	119-1/8	164-1/4	30	30	5-1/16	7-1/2	27-1/2	31	18-1/2	8-3/4	6-3/4	26-1/2	4-1/8	26-1/2	1	3
4-IBT.400-920	2462	178-5/8	57-3/4	60-7/16	57-1/16	64-3/8	51-13/16	5-1/4	72	10-3/4	2-11/16	N/A	N/A	123-3/16	34	36-3/4	6-9/16	7-1/2	28-1/2	34	18-1/2	8-3/4	8-1/2	26-1/2	4-1/8	26-1/2	1	1
4-IBT.800-400-400-920	2679	178-5/8	57-3/4	60-7/16	57-1/16	64-3/8	51-13/16	5-1/4	72	10-3/4	2-11/16	N/A	N/A	123-3/16	34	36-3/4	6-9/16	7-1/2	28-1/2	34	18-1/2	8-3/4	8-1/2	26-1/2	4-1/8	26-1/2	1	2
4-IBT.1000-300-300-400-920	3562	238-3/4	57-3/4	60-7/16	57-1/16	64-3/8	51-13/16	5-1/4	72	10-3/4	2-11/16	62-13/16	119-1/8	183-5/16	34	36-3/4	6-9/16	7-1/2	28-1/2	34	18-1/2	8-3/4	8-1/2	26-1/2	4-1/8	26-1/2	1	3
4-IBT.1200-400-400-400-920	3674	238-3/4	57-3/4	60-7/16	57-1/16	64-3/8	51-13/16	5-1/4	72	10-3/4	2-11/16	62-13/16	119-1/8	183-5/16	34	36-3/4	6-9/16	7-1/2	28-1/2	34	18-1/2	8-3/4	8-1/2	26-1/2	4-1/8	26-1/2	1	3
4-IBT.1400-300-300-400-400-920	3786	238-3/4	57-3/4	60-7/16	57-1/16	64-3/8	51-13/16	5-1/4	72	10-3/4	2-11/16	62-13/16	119-1/8	183-5/16	34	36-3/4	6-9/16	7-1/2	28-1/2	34	18-1/2	8-3/4	8-1/2	26-1/2	4-1/8	26-1/2	1	4
4-IBT.1600-400-400-400-400-920	3898	238-3/4	57-3/4	60-7/16	57-1/16	64-3/8	51-13/16	5-1/4	72	10-3/4	2-11/16	62-13/16	119-1/8	183-5/16	34	36-3/4	6-9/16	7-1/2	28-1/2	34	18-1/2	8-3/4	8-1/2	26-1/2	4-1/8	26-1/2	1	4
5-IBT.400-925	3050	188-5/8	66-3/8	79-7/16	59-15/16	68-7/16	54-11/16	5-1/4	72	10-3/4	2-11/16	N/A	N/A	134-3/16	43	43	7-7/16	7-1/2	31-1/2	34	18-1/2	8-3/4	10-3/4	32	3-1/8	27-1/2	1	1
5-IBT.800-400-400-925	3267	188-5/8	66-3/8	79-7/16	59-15/16	68-7/16	54-11/16	5-1/4	72	10-3/4	2-11/16	N/A	N/A	134-3/16	43	43	7-7/16	7-1/2	31-1/2	34	18-1/2	8-3/4	10-3/4	32	3-1/8	27-1/2	1	2
5-IBT.1000-300-300-400-925	4039	248-3/4	66-3/8	79-7/16	59-15/16	68-7/16	54-11/16	5-1/4	72	10-3/4	2-11/16	62-13/16	119-1/8	193-5/16	43	43	7-7/16	7-1/2	31-1/2	34	18-1/2	8-3/4	10-3/4	32	3-1/8	27-1/2	1	3
5-IBT.1200-400-400-400-925	4151	248-3/4	66-3/8	79-7/16	59-15/16	68-7/16	54-11/16	5-1/4	72	10-3/4	2-11/16	62-13/16	119-1/8	193-5/16	43	43	7-7/16	7-1/2	31-1/2	34	18-1/2	8-3/4	10-3/4	32	3-1/8	27-1/2	1	3
5-IBT.1400-300-300-400-400-925	4263	248-3/4	66-3/8	79-7/16	59-15/16	68-7/16	54-11/16	5-1/4	72	10-3/4	2-11/16	62-13/16	119-1/8	193-5/16	43	43	7-7/16	7-1/2	31-1/2	34	18-1/2	8-3/4	10-3/4	32	3-1/8	27-1/2	1	4
5-IBT.1600-400-400-400-400-925	4375	248-3/4	66-3/8	79-7/16	59-15/16	68-7/16	54-11/16	5-1/4	72	10-3/4	2-11/16	62-13/16	119-1/8	193-5/16	43	43	7-7/16	7-1/2	31-1/2	34	18-1/2	8-3/4	10-3/4	32	3-1/8	27-1/2	1	4

UNIT INFORMATION

MODEL	BTU RANGE (MBH)**			TURNDOWN RATIO	COMBUSTION EFFICIENCY***	GAS PRESSURE****	
	BURNER INPUT	BTU LOW	BTU HIGH			MIN	MAX
1-IBT.150-G10	150	20	120	6	80.0%	7" WC	14" WC
1-IBT.200-G10	200	26.7	160	6	80.0%	7" WC	14" WC
1-IBT.300-150-150-G10	300	20	240	12	80.0%	7" WC	14" WC
1-IBT.400-200-200-G10	400	26.7	320	12	80.0%	7" WC	14" WC
2-IBT.200-G15	200	26.7	160	6	80.0%	7" WC	14" WC
2-IBT.300-G15	300	40	240	6	80.0%	7" WC	14" WC
2-IBT.400-G15	400	53.3	320	6	80.0%	7" WC	14" WC
2-IBT.400-200-200-G15	400	26.7	320	12	80.0%	7" WC	14" WC
2-IBT.600-300-300-G15	600	40	480	12	80.0%	7" WC	14" WC
2-IBT.800-400-400-G15	800	53.3	640	12	80.0%	7" WC	14" WC
3-IBT.400-G18	400	53.3	320	6	80.0%	7" WC	14" WC
3-IBT.600-300-300-G18	600	40	480	12	80.0%	7" WC	14" WC
3-IBT.800-400-400-G18	800	53.3	640	12	80.0%	7" WC	14" WC
3-IBT.1000-300-300-400-G18	1000	40	800	20	80.0%	7" WC	14" WC
3-IBT.1200-400-400-400-G18	1200	53.3	960	18	80.0%	7" WC	14" WC
4-IBT.400-920	400	53.3	320	6	80.0%	7" WC	14" WC
4-IBT.800-400-400-920	800	53.3	640	12	80.0%	7" WC	14" WC
4-IBT.1000-300-300-400-920	1000	40	800	20	80.0%	7" WC	14" WC
4-IBT.1200-400-400-400-920	1200	53.3	960	18	80.0%	7" WC	14" WC
4-IBT.1400-300-300-400-400-920	1400	40	1120	28	80.0%	7" WC	14" WC
4-IBT.1600-400-400-400-400-920	1600	53.3	1280	24	80.0%	7" WC	14" WC
5-IBT.400-925	400	53.3	320	6	80.0%	7" WC	14" WC
5-IBT.800-400-400-925	800	53.3	640	12	80.0%	7" WC	14" WC
5-IBT.1000-300-300-400-925	1000	40	800	20	80.0%	7" WC	14" WC
5-IBT.1200-400-400-400-925	1200	53.3	960	18	80.0%	7" WC	14" WC
5-IBT.1400-300-300-400-400-925	1400	40	1120	28	80.0%	7" WC	14" WC
5-IBT.1600-400-400-400-400-925	1600	53.3	1280	24	80.0%	7" WC	14" WC

* ADDITIONAL UNI-STRUT/GAS CONNECTION ONLY FOR UNITS WITH 3 OR 4 FURNACES

**ALL MODELS ARE FULLY ELECTRONICALLY MODULATING

*** COMBUSTION EFFICIENCY OF EVERY UNIT IS 80.0% OVER THE ENTIRE GAS FIRING RANGE.

**** GAS PRESSURES IN TABLE ARE FOR NATURAL GAS, LP MINIMUM GAS INLET PRESSURE = 11" W.C.