MODULAR OUTDOOR SIDE DISCHARGE BLOWER WITH HEATING COIL, V-BANK FILTER, MIXING BOX AND INTAKE HOOD

IHV3MBHCSAH
REV.#1 12/1/2016

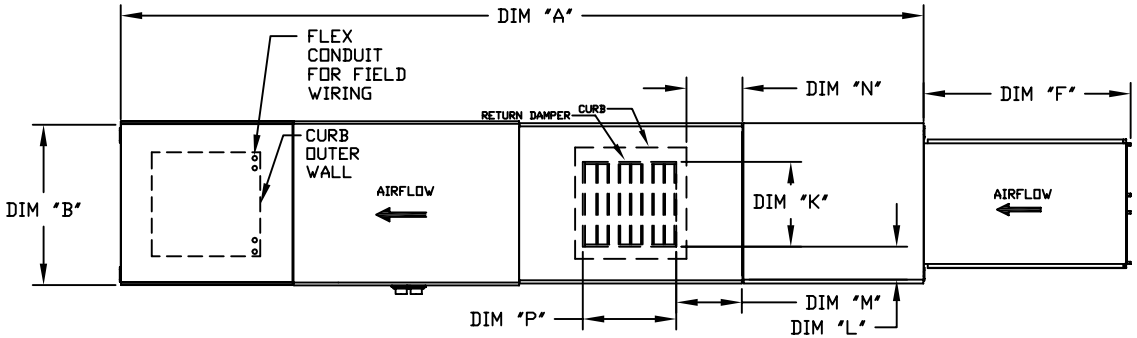

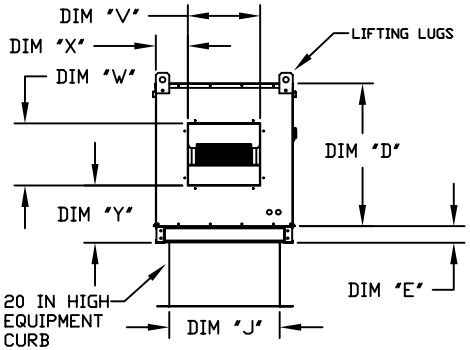

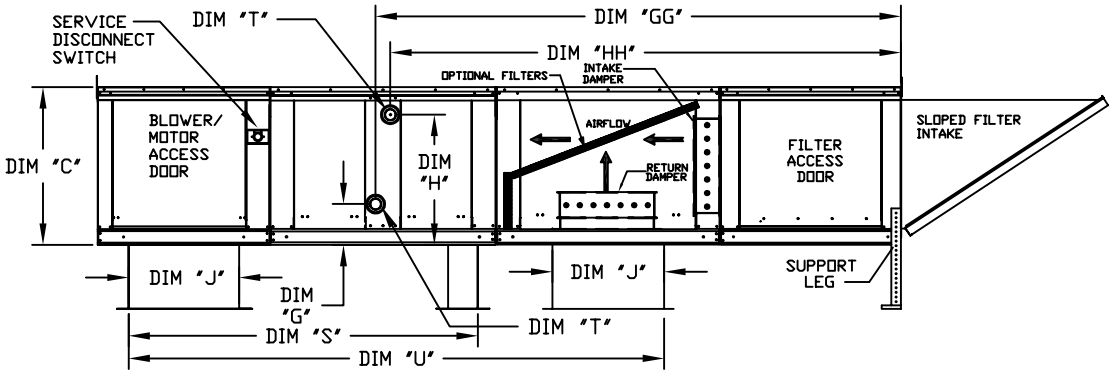

MAX. ROOF OPENING 2" SMALLER THEN CURB OUTSIDE DIMENSION

ALL DIMENSIONS ARE NOMINAL AND GIVEN IN INCHES.

	UNIT DIMENSIONS														BELT DRIVE DISCHARGE OPENING				DIRECT DRIVE DISCHARGE OPENING			
UNIT SIZE	A	B	C	D	E	F	J	K	L	M	N	P	S	U	V	W	X	Y	V	W	X	Y
1	148-7/8	27-3/8	29-3/4	26-1/16	3-3/4	44-3/8	21	14	8	14	12-1/2	18	65-13/16	98-5/8	13-1/4	11-1/2	6-3/8	11-7/8	17-1/4	15-1/2	4-3/8	8-15/16
2**	156-7/8	37-3/8	36-3/4	33-1/16	3-3/4	53-5/8	31	22-3/4	8	11	7-1/2	24	74-5/8	112-9/16	15-3/4	13-9/16	10-1/8	13-1/16	N/A	N/A	N/A	N/A
2	156-7/8	37-3/8	36-3/4	33-1/16	3-3/4	53-5/8	31	22-3/4	8	11	7-1/2	24	74-5/8	112-5/8	18-3/4	16	8-5/8	14-1/16	24-3/4	22	5-5/8	10-15/16
3	171-7/8	41-3/8	43-3/8	38-1/16	5-1/4	51-5/8	35	28	8	7	4-1/2	30	79-3/16	120-1/8	22	19	9	17-7/8	28	25	6-1/16	14-15/16
4	227-1/8	48-7/16	51-3/8	46-1/8	5-1/4	76-3/8	42	33	10	11	8	36	104-9/32	153-15/16	24-7/8	24-7/8	11-1/16	19-1/8	30	30	8-9/16	16-5/8
5	237-1/8	59-3/16	58-3/8	53-1/8	5-1/4	71-3/8	52-3/4	43	10	6-1/2	1-1/4	43	114-21/32	170-7/8	31-3/8	31-3/8	13-3/16	21-9/16	35-3/8	35-3/8	11-1/4	19-10/16

OPTIONAL MIXING BOX FILTERS
FILTER SIZE & QTY
10"x16"x2" (5)
20"x25"x2" (2), 16"x25"x2" (1)
20"x25"x2" (2), 16"x25"x2" (1)
15"x20"x2" (4), 15"x15"x2" (2)
18"x25"x2" (4), 16"x20"x2" (2)
14.5"x19"x2" (12)

HOT WATER COIL MODULE

UNIT SIZE	WEIGHT	TOTAL CAPACITY (MBH)	PIPE CONNECTION "T" (MPT)	G	GG	H	HH
1	660 LBS	165.63	2	8-1/4	96-15/16	24-3/4	94-3/16
2**	985 LBS	320.88	2	8-1/4	96-15/16	28-3/4	94-3/16
2	995 LBS	320.88	2	8-1/4	96-15/16	28-3/4	94-3/16
3	1230 LBS	514.97	1-1/2	9-1/2	102-11/16	38	100-7/16
4	2090 LBS	831.87	2-1/2	10	118-1/4	45-1/2	114-5/8
5	2725 LBS	1230.16	3	10-1/4	118-1/2	52-1/4	115

STEAM COIL MODULE

UNIT SIZE	WEIGHT	TOTAL CAPACITY (MBH)	PIPE CONNECTION "T" (MPT)	STEAM PSI	G	GG	H	HH
1	660 LBS	176.49	2-1/2	5	8-3/4	95-9/16	16-15/16	95-9/16
2**	985 LBS	328.19	2-1/2	5	8-3/4	95-9/16	18-3/8	95-9/16
2	995 LBS	328.19	2-1/2	5	8-3/4	95-9/16	18-3/8	95-9/16
3	1225 LBS	505.64	2-1/2	5	10-1/4	101-9/16	23-5/8	101-9/16
4	2065 LBS	812.24	2-1/2	5	10-1/4	116-25/32	28-5/8	116-25/32
5	2720 LBS	1234.45	2-1/2	5	10-1/4	116-25/32	31-3/4	116-25/32

V-BANK FILTER

UNIT SIZE	FILTER SIZE & QTY	MAX. FILTER VELOCITY
1	20"x25"x2" (3)	@3500 CFM = 406 FPM
2**	16"x20"x2" (8)	@5000 CFM = 358 FPM
2	16"x20"x2" (8)	@6000 CFM = 429 FPM
3	20"x25"x2" (8)	@8000 CFM = 348 FPM
4	16"x20"x2" (15)	@15000 CFM = 572 FPM
5	20"x25"x2" (12)	@22000 CFM = 638 FPM

** DIMENSIONS APPLY TO UNITS WITH C13 BLOWERS ONLY