MODULAR OUTDOOR SIDE DISCHARGE BLOWER WITH V-BANK, MIXING BOX AND INTAKE HOOD

IHVBMBSAH
REV.#1 12/1/2016

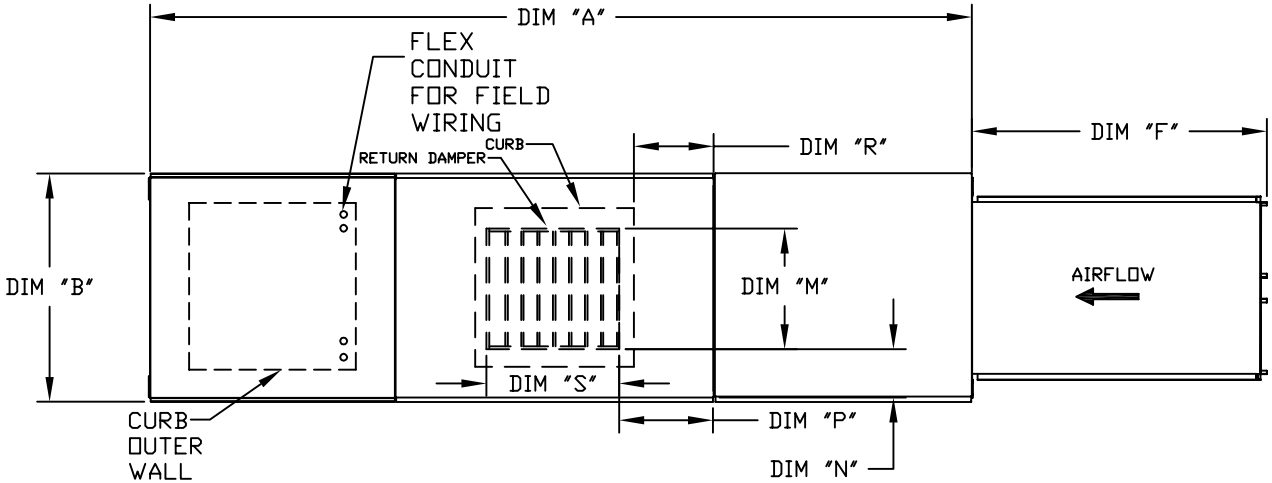

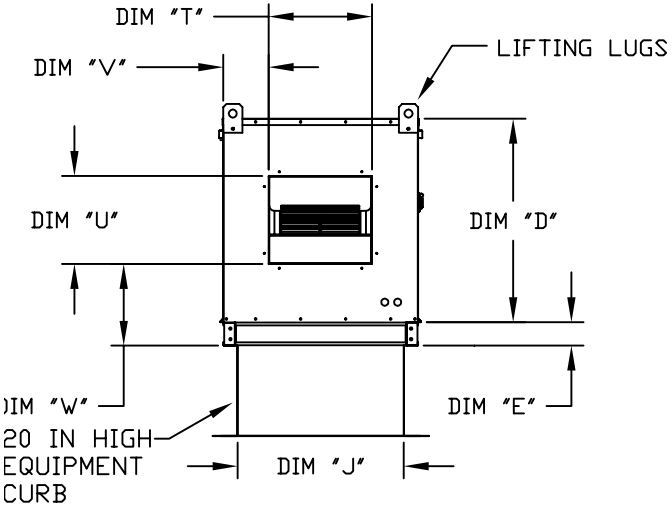

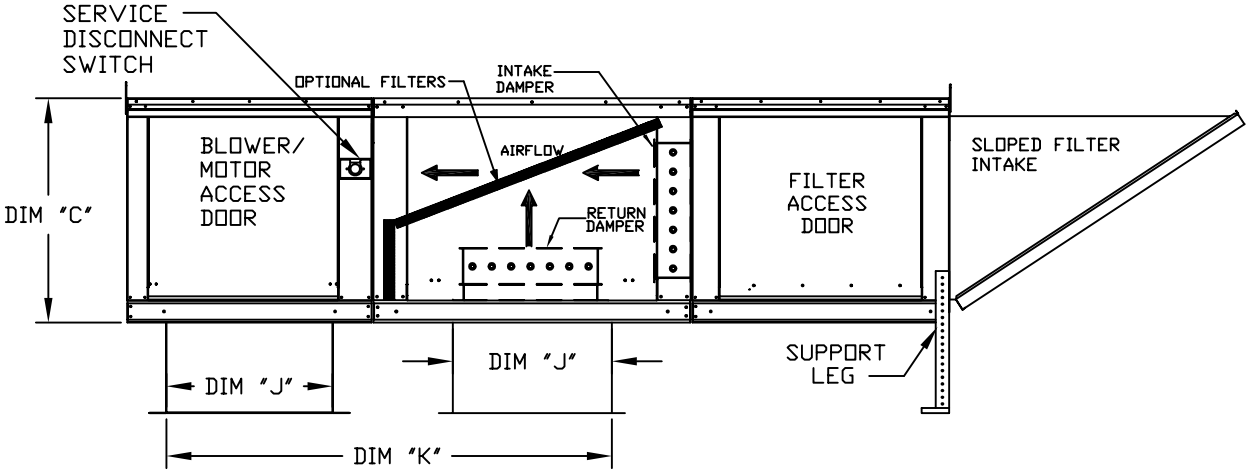

MAX. ROOF OPENING 2" SMALLER THEN CURB OUTSIDE DIMENSION

ALL DIMENSIONS ARE NOMINAL AND GIVEN IN INCHES.

		UNIT DIMENSIONS								RETURN OPENING					BELT DRIVE DISCHARGE OPENING				DIRECT DRIVE DISCHARGE OPENING			
UNIT SIZE	WEIGHT	A	B	C	D	E	F	J	K	M	N	P	R	S	T	U	V	W	T	U	V	W
1	500 LBS	106-5/8	27-3/8	29-3/4	26-1/16	3-3/4	44-3/8	21	56-3/8	14	8	14	12-1/2	18	13-1/4	11-1/2	6-3/8	11-7/8	17-1/4	15-1/2	4-3/8	8-15/16
2**	765 LBS	114-5/8	37-3/8	36-3/4	33-1/16	3-3/4	53-5/8	31	70-5/16	22-3/4	8	11	7-1/2	24	15-3/4	13-9/16	10-1/8	13-1/16	N/A	N/A	N/A	N/A
2	775 LBS	114-5/8	37-3/8	36-3/4	33-1/16	3-3/4	53-5/8	31	70-3/8	22-3/4	8	11	7-1/2	24	18-3/4	16	8-5/8	14-1/16	24-3/4	22	5-5/8	10-15/16
3	970 LBS	125-5/8	41-3/8	43-3/8	38-1/16	5-1/4	51-5/8	35	77-7/8	28	8	7	4-1/2	30	22	19	9	17-7/8	28	25	6-1/16	14-15/16
4	1665 LBS	153-7/8	48-7/16	51-3/8	46-1/8	5-1/4	76-3/8	42	99-3/8	33	10	11	8	36	24-7/8	24-7/8	11-1/16	19-1/8	30	30	8-9/16	16-5/8
5	2200 LBS	163-7/8	59-3/16	58-3/8	53-1/8	5-1/4	71-3/8	52-3/4	116-9/16	43	10	6-1/2	1-1/4	43	31-3/8	31-3/8	13-3/16	21-9/16	35-3/8	35-3/8	11-1/4	19-10/16

UNIT INFORMATION

UNIT SIZE	FILTER SIZE & QTY	MAX. FILTER VELOCITY
1	20"x25"x2" (3)	@3500 CFM = 406 FPM
2**	16"x20"x2" (8)	@5000 CFM = 358 FPM
2	16"x20"x2" (8)	@6000 CFM = 429 FPM
3	20"x25"x2" (8)	@8000 CFM = 348 FPM
4	16"x20"x2" (15)	@15000 CFM = 572 FPM
5	20"x25"x2" (12)	@22000 CFM = 638 FPM

OPTIONAL MIXING BOX FILTERS

UNIT SIZE	FILTER SIZE & QTY
1	10"x16"x2" (5)
2**	20"x25"x2" (2), 16"x25"x2" (1)
2	20"x25"x2" (2), 16"x25"x2" (1)
3	15"x20"x2" (4), 15"x15"x2" (2)
4	18"x25"x2" (4), 16"x20"x2" (2)
5	14.5"x19"x2" (12)

** DIMENSIONS APPLY TO UNITS WITH G13 BLOWERS ONLY