MODULAR OUTDOOR DOWN DISCHARGE BLOWER WITH HEATING COIL, V-BANK FILTER, MIXING BOX AND SCREEN INTAKE

SIVBMBHCDAH
REV.#1 12/1/2016

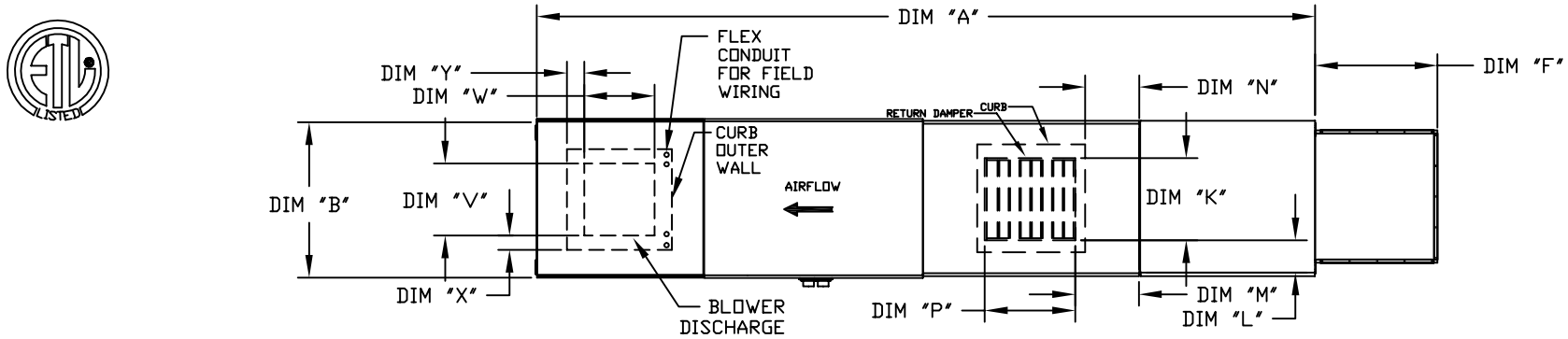

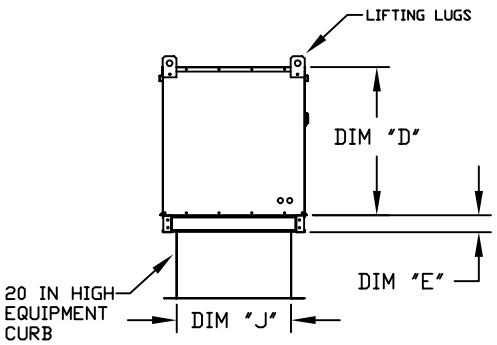

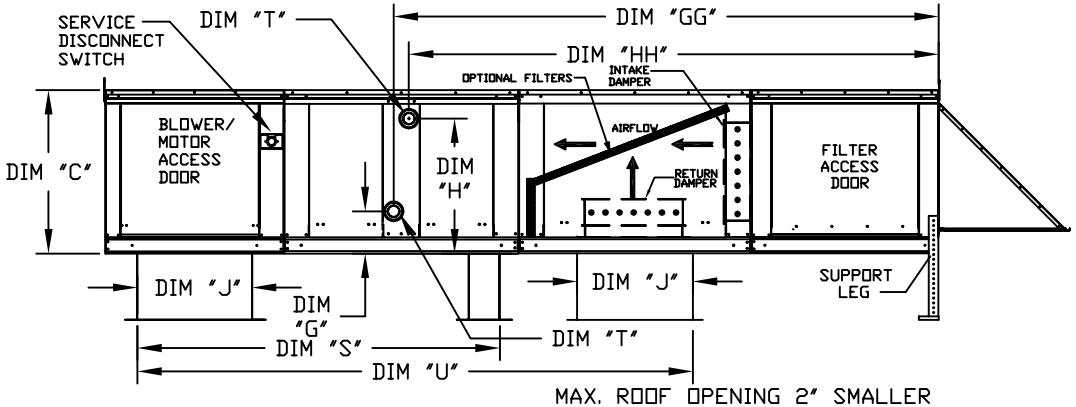

MAX. ROOF OPENING 2" SMALLER THEN CURB OUTSIDE DIMENSION

ALL DIMENSIONS ARE NOMINAL AND GIVEN IN INCHES.

	UNIT DIMENSIONS														DISCHARGE OPENING			
UNIT SIZE	A	B	C	D	E	F	J	K	L	M	N	P	S	U	V	W	X	Y
1	148-7/8	27-3/8	29-3/4	26-1/16	3-3/4	22-3/8	21	14	8	14	12-1/2	18	65-13/16	98-5/8	13-1/4	11-1/2	3-7/8	1-3/4
2**	156-7/8	37-3/8	36-3/4	33-1/16	3-3/4	30-5/16	31	22-3/4	8	11	7-1/2	24	74-5/8	112-9/16	15-3/4	13-9/16	7-5/8	7-15/16
2	156-7/8	37-3/8	36-3/4	33-1/16	3-3/4	30-5/16	31	22-3/4	8	11	7-1/2	24	74-5/8	112-5/8	18-3/4	16	6-1/8	5-1/2
3	171-7/8	41-3/8	43-3/8	38-1/16	5-1/4	34-3/16	35	28	8	7	4-1/2	30	79-3/16	120-1/8	22	19	6-1/2	7
4	227-1/8	48-7/16	51-3/8	46-1/8	5-1/4	47-1/4	42	33	10	11	8	36	104-9/32	153-15/16	24-7/8	24-7/8	8-9/16	1-1/8
5	237-1/8	59-3/16	58-3/8	53-1/8	5-1/4	49-1/2	52-3/4	43	10	6-1/2	1-1/4	43	114-21/32	170-7/8	31-3/8	31-3/8	10-11/16	3-13/16

OPTIONAL MIXING BOX FILTERS
FILTER SIZE & QTY
10"x16"x2" (5)
20"x25"x2" (2), 16"x25"x2" (1)
20"x25"x2" (2), 16"x25"x2" (1)
15"x20"x2" (4), 15"x15"x2" (2)
18"x25"x2" (4), 16"x20"x2" (2)
14.5"x19"x2" (12)

HOT WATER COIL MODULE

		TOTAL CAPACITY	PIPE CONNECTION				
UNIT SIZE	WEIGHT	(MBH)	"T" (MPT)	G	GG	H	HH
1	640 LBS	165.63	2	8-1/4	96-15/16	24-3/4	94-3/16
2**	955 LBS	320.88	2	8-1/4	96-15/16	28-3/4	94-3/16
2	965 LBS	320.88	2	8-1/4	96-15/16	28-3/4	94-3/16
3	1190 LBS	514.97	1-1/2	9-1/2	102-11/16	38	100-7/16
4	1980 LBS	831.87	2-1/2	10	118-1/4	45-1/2	114-5/8
5	2635 LBS	1230.16	3	10-1/4	118-1/2	52-1/4	115

STEAM COIL MODULE

		TOTAL CAPACITY	PIPE CONNECTION	STEAM				
UNIT SIZE	WEIGHT	(MBH)	"T" (MPT)	PSI	G	GG	H	HH
1	640 LBS	176.49	2-1/2	5	8-3/4	95-9/16	16-15/16	95-9/16
2**	955 LBS	328.19	2-1/2	5	8-3/4	95-9/16	18-3/8	95-9/16
2	965 LBS	328.19	2-1/2	5	8-3/4	95-9/16	18-3/8	95-9/16
3	1185 LBS	505.64	2-1/2	5	10-1/4	101-9/16	23-5/8	101-9/16
4	1955 LBS	812.24	2-1/2	5	10-1/4	116-25/32	28-5/8	116-25/32
5	2630 LBS	1234.45	2-1/2	5	10-1/4	116-25/32	31-3/4	116-25/32

V-BANK FILTER

UNIT SIZE	FILTER SIZE & QTY	MAX. FILTER VELOCITY
1	20"x25"x2" (3)	@3500 CFM = 406 FPM
2**	16"x20"x2" (8)	@5000 CFM = 358 FPM
2	16"x20"x2" (8)	@6000 CFM = 429 FPM
3	20"x25"x2" (8)	@8000 CFM = 348 FPM
4	16"x20"x2" (15)	@15000 CFM = 572 FPM
5	20"x25"x2" (12)	@22000 CFM = 638 FPM

** DIMENSIONS APPLY TO UNITS WITH G13 BLOWERS ONLY