MODULAR OUTDOOR DOWN DISCHARGE BLOWER WITH EVAPORATIVE COOLER AND SCREEN INTAKE

SIECDAH
REV.#3 10/21/20

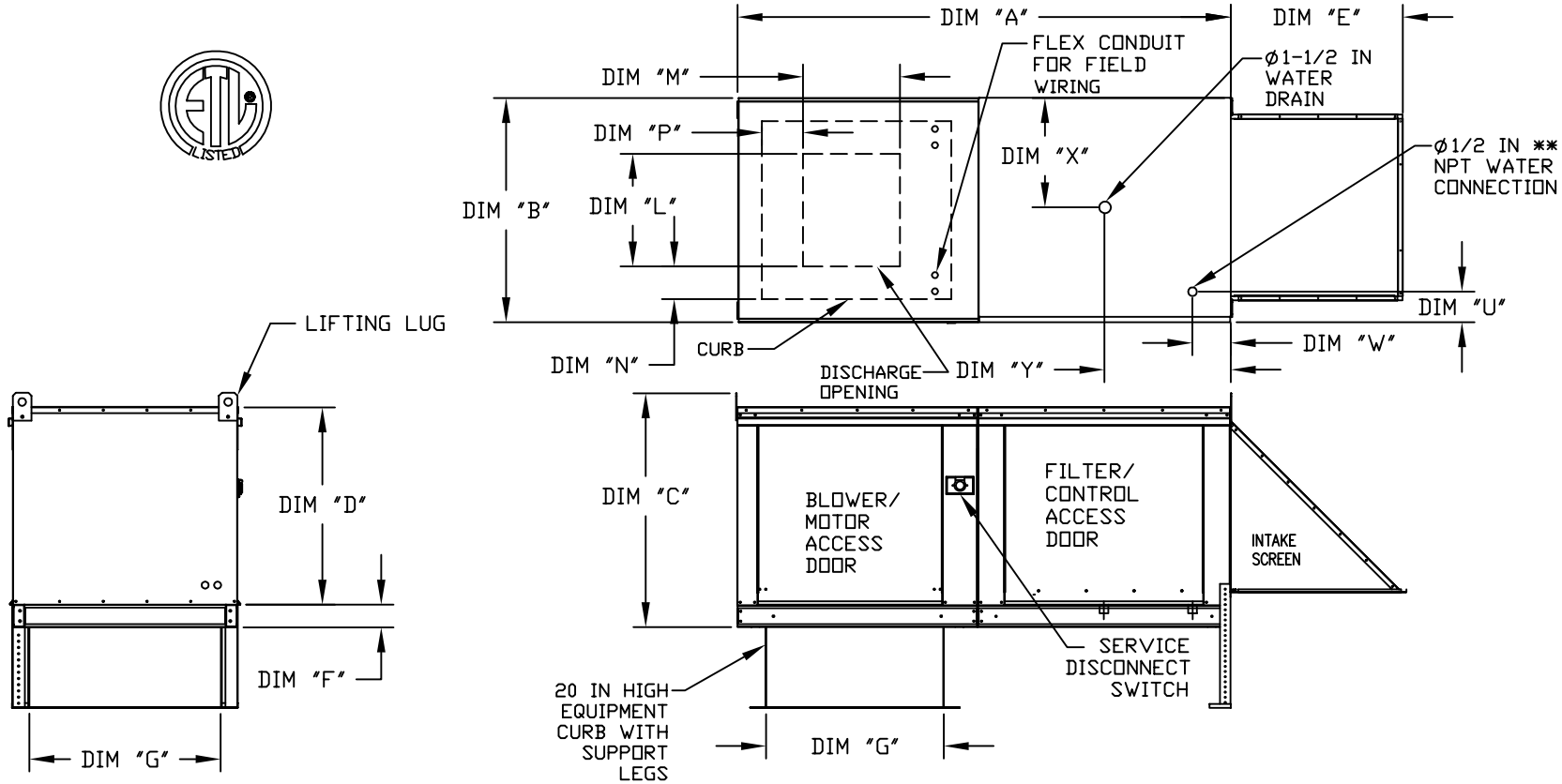

ALL DIMENSIONS ARE NOMINAL AND GIVEN IN INCHES.

ROOF OPENING 2" SMALLER THEN CURB DIMENSION.

	UNIT DIMENSIONS							DISCHARGE VIEW				WATER INLET		DRAIN OPENING	
MODEL	A	B	C	D	E	F	G	L	M	N	P	U	W	X	Y
G10	64-3/8	27-3/8	29-3/4	26-1/16	3-3/4	22-3/8	21	13-1/4	11-1/2	3-7/8	1-3/4	4-1/2	6-1/4	13	16
G12	72-3/8	37-3/8	36-3/4	33-1/16	3-3/4	30-5/16	31	15-3/4	13-9/16	7-5/8	7-15/16	4-1/2	6-1/4	18	16
G15	72-3/8	37-3/8	36-3/4	33-1/16	3-3/4	30-5/16	31	18-3/4	16	6-1/8	5-1/2	4-1/2	6-1/4	18	16
G18	83-3/8	41-3/8	43-3/8	38-1/16	5-1/4	34-3/16	35	22	19	6-1/2	7	4-1/2	5-3/4	20	19
920	99-9/16	48-7/16	51-3/8	46-1/8	5-1/4	47-1/4	42	24-7/8	24-7/8	8-9/16	1-1/8	4-1/2	5-3/4	23-1/2	17-1/2
925	109-9/16	59-3/16	58-3/8	53-1/8	5-1/4	49-1/2	52-3/4	31-3/8	31-3/8	10-11/16	3-13/16	4-1/2	5-3/4	28-7/8	17-1/2

UNIT INFORMATION

MODEL	STANDARD EVAPORATIVE COOLING UNIT					CELDEK EVAPORATIVE COOLING UNIT				
	TOT. WEIGHT	MEDIA SIZE & QTY	VEL. @ MAX. CFM	NOZZLES	MAX. FLOW RATE	TOT. WEIGHT	MEDIA SIZE & QTY	VEL. @ MAX. CFM	NOZZLES	MAX. FLOW RATE
G10	360 LBS	20"x25"x2" (3)	406 FPM	6	3 GPH	365 LBS	20"x24"x12"	1050 FPM	12	3.9 GPH
G12	565 LBS	16"x20"x2" (8)	358 FPM	10	5 GPH	560 LBS	25"x32"x12"	900 FPM	20	6.5 GPH
G15	575 LBS	16"x20"x2" (8)	429 FPM	10	5 GPH	570 LBS	25"x32"x12"	1080 FPM	20	6.5 GPH
G18	725 LBS	20"x25"x2" (8)	348 FPM	14	7 GPH	715 LBS	30"x36"x12"	1067 FPM	28	8.4 GPH
920	1165 LBS	16"x20"x2" (15)	572 FPM	24	12 GPH	1135 LBS	38"x43"x12"	1322 FPM	35	10.15 GPH
925	1645 LBS	20"x25"x2" (12)	638 FPM	30	15 GPH	1605 LBS	45"x54"x12"	1304 FPM	42	12.6 GPH

** MAX EVAP WATER PRESSURE = 50 PSI @ 70 DEG F