# MODULAR OUTDOOR SIDE DISCHARGE BLOWER WITH LPD EVAPORATIVE COOLER, MIXING BOX AND INTAKE HOOD

IHLPDECMBSAH
REV.#2 09/13/2016

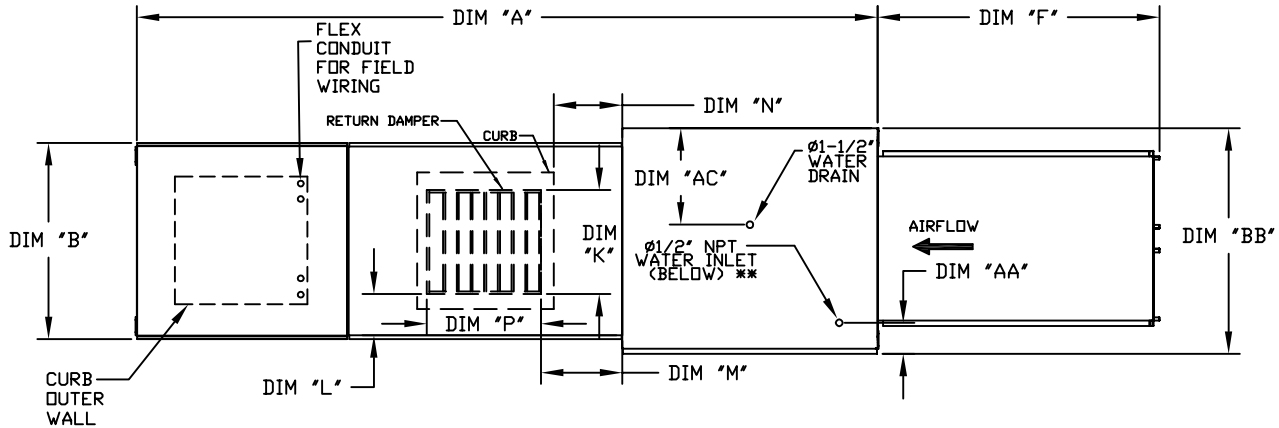


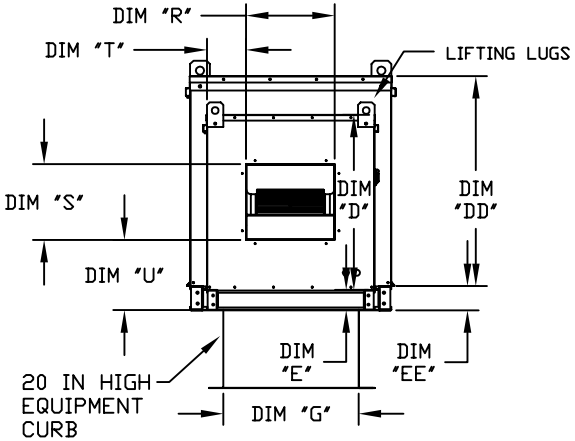


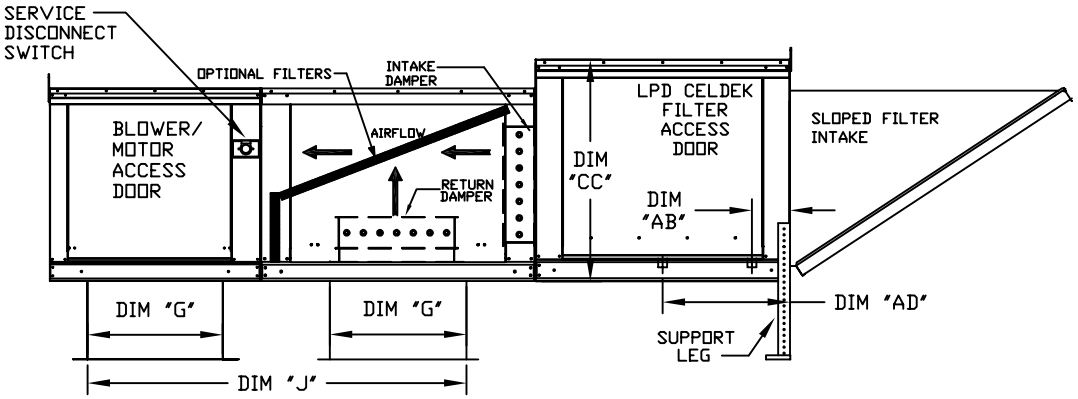


ALL DIMENSIONS ARE NOMINAL AND GIVEN IN INCHES.

| | UNIT DIMENSIONS | | | | | | | | | | | | RETURN OPENING | | | | | BELT DRIVE DISCHARGE OPENING | | | | DIRECT DRIVE DISCHARGE OPENING | | | |
|---|---|---|---|---|---|---|---|---|---|---|---|---|---|---|---|---|---|---|---|---|---|---|---|---|---|
| UNIT SIZE | A | B | BB | C | CC | D | DD | E | EE | F | G | J | K | L | M | N | P | R | S | T | U | R | S | T | U |
| 1 | 106-5/8 | 27-3/8 | 37-3/8 | 29-3/4 | 36-3/4 | 26-1/16 | 33 | 3-3/4 | 3-3/4 | 53-5/8 | 21 | 56-3/8 | 14 | 8 | 14 | 12-1/2 | 18 | 13-1/4 | 11-1/2 | 6-3/8 | 11-7/8 | 17-1/4 | 15-1/2 | 4-3/8 | 8-15/16 |
| 2** | 120-5/8 | 37-3/8 | 41-3/8 | 36-3/4 | 43-3/8 | 33-1/16 | 38-1/8 | 3-3/4 | 5-1/4 | 51-5/8 | 31 | 70-5/16 | 22-3/4 | 8 | 11 | 7-1/2 | 24 | 15-3/4 | 13-9/16 | 10-1/8 | 13-1/16 | N/A | N/A | N/A | N/A |
| 2 | 120-5/8 | 37-3/8 | 41-3/8 | 36-3/4 | 43-3/8 | 33-1/16 | 38-1/8 | 3-3/4 | 5-1/4 | 51-5/8 | 31 | 70-3/8 | 22-3/4 | 8 | 11 | 7-1/2 | 24 | 18-3/4 | 16 | 8-5/8 | 14-1/16 | 24-3/4 | 22 | 5-5/8 | 10-15/16 |
| 3 | 122-3/4 | 41-3/8 | 48-7/16 | 43-3/8 | 51-3/8 | 38-1/16 | 46-1/8 | 5-1/4 | 5-1/4 | 76-3/8 | 35 | 77-7/8 | 28 | 8 | 7 | 4-1/2 | 30 | 22 | 19 | 9 | 17-7/8 | 28 | 25 | 6-1/16 | 14-15/16 |
| 4 | 153-7/8 | 48-7/16 | 59-3/16 | 51-3/8 | 58-3/8 | 46-1/8 | 53-1/8 | 5-1/4 | 5-1/4 | 71-3/8 | 42 | 99-3/8 | 33 | 10 | 11 | 8 | 36 | 24-7/8 | 24-7/8 | 11-1/16 | 19 | 30 | 30 | 8-9/16 | 16-5/8 |
| 5 | 163-7/8 | 59-3/16 | 74-7/8 | 58-3/8 | 58-3/8 | 53-1/8 | 53-1/8 | 5-1/4 | 5-1/4 | 71-3/8 | 52-3/4 | 116-9/16 | 43 | 10 | 6-1/2 | 1-1/4 | 43 | 31-3/8 | 31-3/8 | 13-3/16 | 21-1/4 | 35-3/8 | 35-3/8 | 11-1/4 | 19-10/16 |

UNIT INFORMATION

| UNIT SIZE | FILTER SIZE & QTY | LPD CELDEK EVAPORATIVE COOLING UNIT | | | | WATER INLET | | DRAIN OPENING | | OPTIONAL MIXING BOX FILTERS |
|---|---|---|---|---|---|---|---|---|---|---|
| | | TOT. WEIGHT | MEDIA SIZE & QTY | NOZZLES | MAX. FLOW RATE | AA | AB | AC | AD | FILTER SIZE & QTY |
| 1 | 20"x25"x2" (3) | 600 LBS | 25"x32"x12" | 20 | 6.5 GPH | 4-1/2 | 6-1/4 | 18 | 16 | 10"x16"x2" (5) |
| 2** | 16"x20"x2" (6) | 885 LBS | 30"x36"x12" | 28 | 8.4 GPH | 4-1/2 | 5-3/4 | 20 | 19 | 20"x25"x2" (2), 16"x25"x2" (1) |
| 2 | 16"x20"x2" (6) | 895 LBS | 30"x36"x12" | 28 | 8.4 GPH | 4-1/2 | 5-3/4 | 20 | 19 | 20"x25"x2" (2), 16"x25"x2" (1) |
| 3 | 16"x20"x2" (10) | 1225 LBS | 38"x43"x12" | 35 | 10.15 GPH | 4-1/2 | 5-3/4 | 23-1/2 | 17-1/2 | 15"x20"x2" (4), 15"x15"x2" (2) |
| 4 | 20"x25"x2" (8) | 1800 LBS | 45"x54"x12" | 42 | 12.6 GPH | 4-1/2 | 5-3/4 | 28-7/8 | 17-1/2 | 18"x25"x2" (4), 16"x20"x2" (2) |
| 5 | 20"x25"x2" (8) | 2405 LBS | 45"x72"x12" | 57 | 20.1 GPH | 4-1/2 | 5-3/4 | 37-1/2 | 17-1/2 | 14.5"x19"x2" (12) |

** DIMENSIONS APPLY TO UNITS WITH G12 BLOWERS ONLY
*** MAX EVAP WATER PRESSURE = 50 PSI @ 70 DEG F
MAX. ROOF OPENING 2" SMALLER THEN CURB OUTSIDE DIMENSION