MODULAR OUTDOOR DOWN DISCHARGE BLOWER WITH LPD EVAPORATIVE COOLER, MIXING BOX AND SCREEN INTAKE

SILPDECMBDAH
REV.#2 09/13/2016

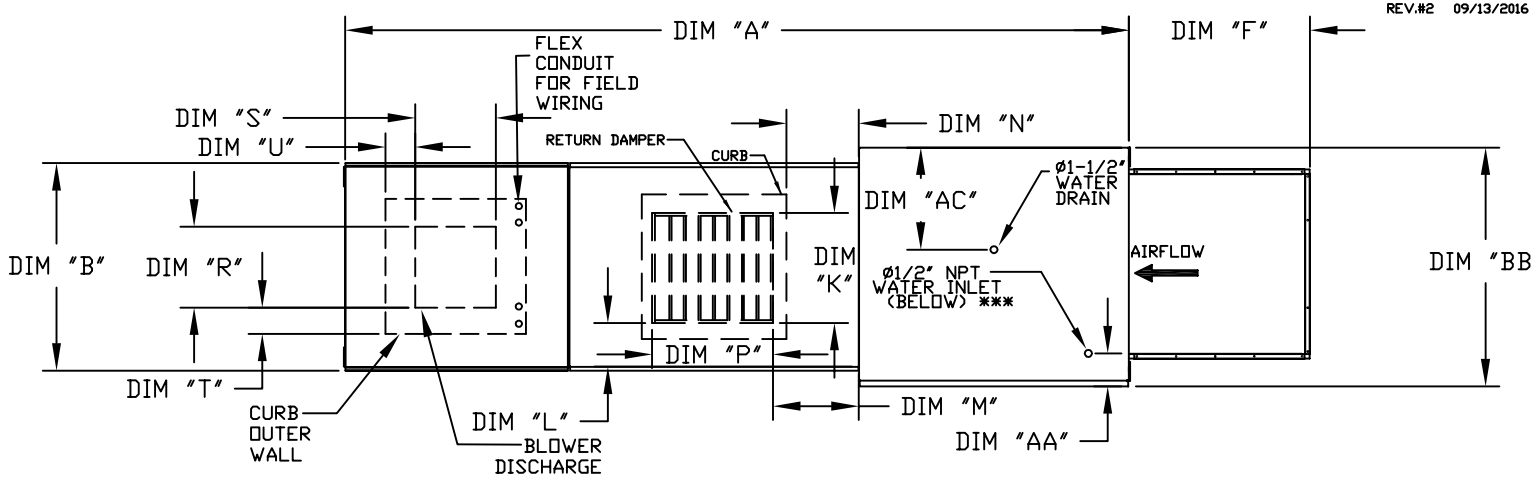

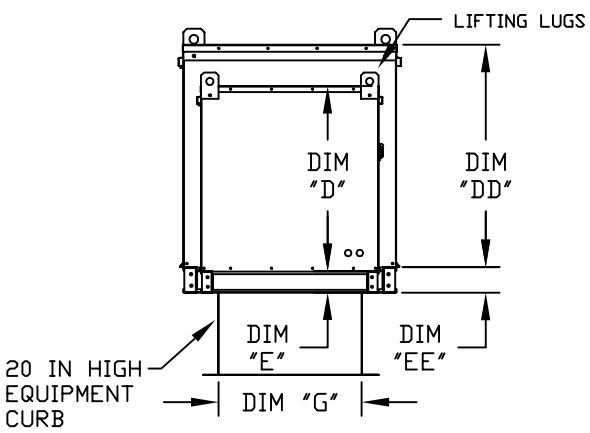

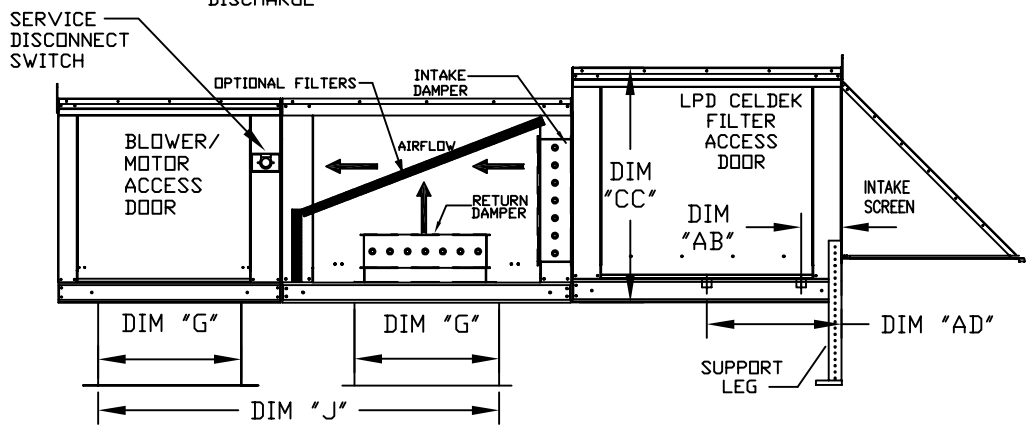

ALL DIMENSIONS ARE NOMINAL AND GIVEN IN INCHES.

	UNIT DIMENSIONS												RETURN OPENING					DISCHARGE OPENING			
UNIT SIZE	A	B	BB	C	CC	D	DD	E	EE	F	G	J	K	L	M	N	P	R	S	T	U
1	106-5/8	27-3/8	37-3/8	29-3/4	36-3/4	26-1/16	33	3-3/4	3-3/4	30-5/16	21	56-3/8	14	8	14	12-1/2	18	13-1/4	11-1/2	3-7/8	1-3/4
2**	120-5/8	37-3/8	41-3/8	36-3/4	43-3/8	33-1/16	38-1/8	3-3/4	5-1/4	34-3/16	31	70-5/16	22-3/4	8	11	7-1/2	24	15-3/4	13-9/16	7-5/8	7-15/16
2	120-5/8	37-3/8	41-3/8	36-3/4	43-3/8	33-1/16	38-1/8	3-3/4	5-1/4	34-3/16	31	70-3/8	22-3/4	8	11	7-1/2	24	18-3/4	16	6-1/8	5-1/2
3	122-3/4	41-3/8	48-7/16	43-3/8	51-3/8	38-1/16	46-1/8	5-1/4	5-1/4	47-1/4	35	77-7/8	28	8	7	4-1/2	30	22	19	6-1/2	7
4	153-7/8	48-7/16	59-3/16	51-3/8	58-3/8	46-1/8	53-1/8	5-1/4	5-1/4	49-1/2	42	99-3/8	33	10	11	8	36	24-7/8	24-7/8	8-9/16	1-1/8
5	163-7/8	59-3/16	74-7/8	58-3/8	58-3/8	53-1/8	53-1/8	5-1/4	5-1/4	49-1/2	52-3/4	116-9/16	43	10	6-1/2	1-1/4	43	31-3/8	31-3/8	10-11/16	3-13/16

UNIT INFORMATION

UNIT SIZE	FILTER SIZE & QTY	LPD CELDEK EVAPORATIVE COOLING UNIT				WATER INLET		DRAIN OPENING		OPTIONAL MIXING BOX FILTERS
		TOT. WEIGHT	MEDIA SIZE & QTY	NOZZLES	MAX. FLOW RATE	AA	AB	AC	AD	FILTER SIZE & QTY
1	20"x25"x2" (3)	570 LBS	25"x32"x12"	20	6.5 GPH	4-1/2	6-1/4	18	16	10"x16"x2" (5)
2**	16"x20"x2" (6)	845 LBS	30"x36"x12"	28	8.4 GPH	4-1/2	5-3/4	20	19	20"x25"x2" (2), 16"x25"x2" (1)
2	16"x20"x2" (6)	855 LBS	30"x36"x12"	28	8.4 GPH	4-1/2	5-3/4	20	19	20"x25"x2" (2), 16"x25"x2" (1)
3	16"x20"x2" (10)	1115 LBS	38"x43"x12"	35	10.15 GPH	4-1/2	5-3/4	23-1/2	17-1/2	15"x20"x2" (4), 15"x15"x2" (2)
4	20"x25"x2" (8)	1710 LBS	45"x54"x12"	42	12.6 GPH	4-1/2	5-3/4	28-7/8	17-1/2	18"x25"x2" (4), 16"x20"x2" (2)
5	20"x25"x2" (8)	2315 LBS	45"x72"x12"	57	20.1 GPH	4-1/2	5-3/4	37-1/2	17-1/2	14.5"x19"x2" (12)

** DIMENSIONS APPLY TO UNITS WITH G12 BLOWERS ONLY
*** MAX EVAP WATER PRESSURE = 50 PSI @ 70 DEG F
MAX ROOF OPENING 2" SMALLER THEN CURB OUTSIDE DIMENSION