OUTDOOR SIDE DISCHARGE MOD PACKAGE UNIT, V-BANK, SCREEN INTAKE AND OPTIONAL MIXING BOX

SIVBMBCCSAH-MPU
REV.#3 01/13/2017

CONDENSER INFORMATION						
MODEL	WEIGHT*	TONNAGE #1	TONNAGE #2	CC	DD	EE
2 TON-1	119 LBS	2 TON	N/A	26-5/16	56-1/16	52-3/8
3 TON-1	134 LBS	3 TON	N/A	33-5/16	63-1/16	59-3/8
5 TON-1	253 LBS	2 TON	3 TON	33-5/16	63-1/16	59-3/8
5 TON-1	302 LBS	2.5 TON	2.5TON	32-13/16	62-9/16	58-7/8
5 TON-2	197 LBS	5 TON	N/A	32-13/16	69-9/16	65-7/8
7.5 TON-2	348 LBS	2.5 TON	5 TON	32-13/16	69-9/16	65-7/8
8 TON-2	331 LBS	3 TON	5 TON	33-5/16	71-11/16	68
10 TON-2	394 LBS	5 TON	5 TON	32-13/16	69-9/16	65-7/8
10 TON-3	394 LBS	5 TON	5 TON	32-13/16	76-3/16	70-7/8
10 TON-4	394 LBS	5 TON	5 TON	32-13/16	97-3/16	91-15/16

R410A REFRIGERANT

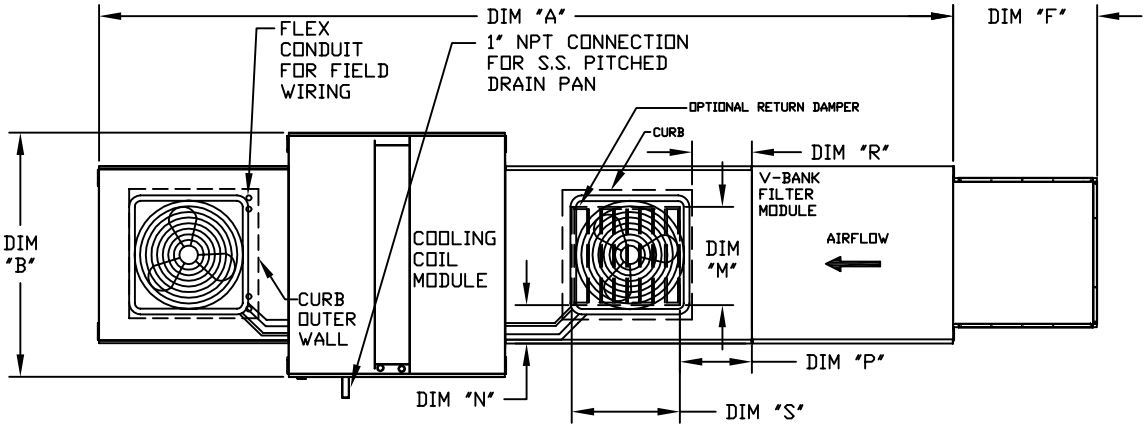

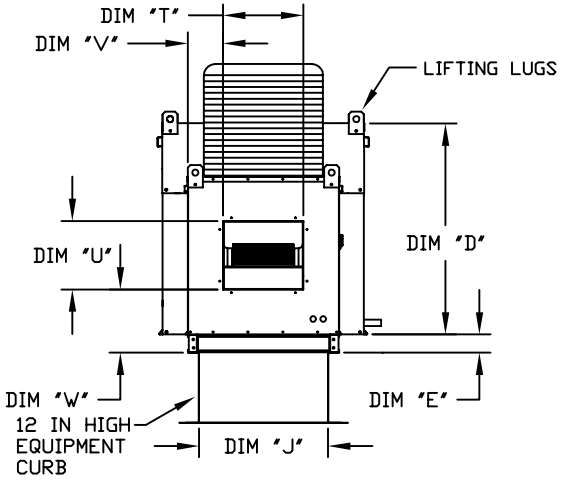

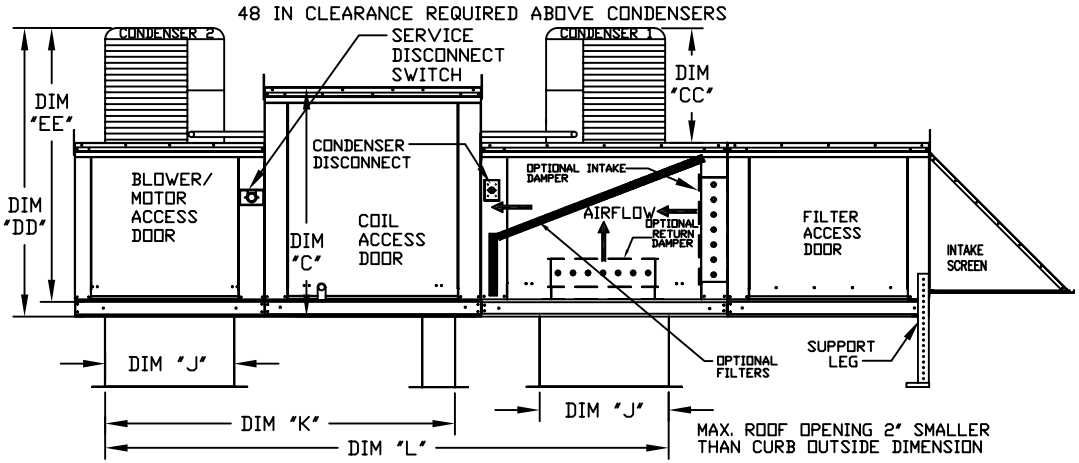

ALL DIMENSIONS ARE NOMINAL AND GIVEN IN INCHES.

		UNIT DIMENSIONS									RETURN OPENING					BELT DRIVE DISCHARGE OPENING				DIRECT DRIVE DISCHARGE OPENING				TONNAGE RANGE	
UNIT SIZE	WEIGHT*	A	B	C	D	E	F	J	K	L	M	N	P	R	S	T	U	V	W	T	U	V	W	MIN	MAX
1	835 LBS	148-7/8	39-3/8	42-3/4	39	3-3/4	22-3/8	21	65-13/16	98-5/8	14	8	14	12-1/2	18	13-1/4	11-1/2	6-3/8	11-7/8	17-1/4	15-1/2	4-3/8	8-15/16	2 Ton	5 Ton
2**	1165 LBS	156-7/8	49-3/8	47-3/4	44	3-3/4	30-5/16	31	74-5/8	112-5/8	22-3/4	8	11	7-1/2	24	15-3/4	13-9/16	10-1/8	13-1/16	N/A	N/A	N/A	N/A	5 Ton	10 Ton
2	1175 LBS	156-7/8	49-3/8	47-3/4	44	3-3/4	30-5/16	31	74-5/8	112-5/8	22-3/4	8	11	7-1/2	24	18-3/4	16	8-5/8	14-1/16	24-3/4	22	5-5/8	10-15/16	5 Ton	10 Ton
3	1435 LBS	167-7/8	54-3/8	56-3/8	51-1/8	5-1/4	34-3/16	35	79-3/16	120-1/8	28	8	7	4-1/2	30	22	19	9	17-7/8	28	25	6-1/16	14-15/16	10 Ton	10 Ton
4	2325 LBS	208-3/16	60-7/16	64-3/8	59-1/8	5-1/4	47-1/4	42	104-9/32	153-15/16	33	10	11	8	36	24-7/8	24-7/8	11-1/16	19-1/8	30	30	8-9/16	16-5/8	10 Ton	10 Ton

UNIT INFORMATION

UNIT SIZE	FILTER SIZE & QTY	MAX. FILTER VELOCITY
1	20"x25"x2" (3)	@3500 CFM = 406 FPM
2**	16"x20"x2" (8)	@5000 CFM = 358 FPM
2	16"x20"x2" (8)	@6000 CFM = 429 FPM
3	20"x25"x2" (8)	@8000 CFM = 348 FPM
4	16"x20"x2" (15)	@15000 CFM = 572 FPM

OPTIONAL MIXING BOX FILTERS
10"x16"x2" (5)
20"x25"x2" (2), 16"x"25"x2" (1)
20"x25"x2" (2), 16"x"25"x2" (1)
15"x20"x2" (4), 15"x15"x2" (2)
18"x25"x2" (4), 16"x20"x2" (2)

*ADD CONDENSING UNIT WEIGHT TO WEIGHT IN TABLE ABOVE
** DIMENSIONS APPLY TO UNITS WITH G12 BLOWERS ONLY