OUTSIDE SIDE DISCHARGE MOD PACKAGE UNIT, HEATING COIL, V-BANK FILTER, SCREEN INTAKE AND OPTIONAL MIXING BOX

SIMBVBHCCCDAH-MPU
REV.#3 01/13/2017

CONDENSER INFORMATION						
MODEL	WEIGHT*	TONNAGE #1	TONNAGE #2	CC	DD	EE
2 TON-1	119 LBS	2 TON	N/A	26-5/16	56-1/16	52-3/8
3 TON-1	134 LBS	3 TON	N/A	33-5/16	63-1/16	59-3/8
5 TON-1	253 LBS	2 TON	3 TON	33-5/16	63-1/16	59-3/8
5 TON-1	302 LBS	2.5 TON	2.5TON	32-13/16	62-9/16	58-7/8
5 TON-2	197 LBS	5 TON	N/A	32-13/16	69-9/16	65-7/8
7.5 TON-2	348 LBS	2.5 TON	5 TON	32-13/16	69-9/16	65-7/8
8 TON-2	331 LBS	3 TON	5 TON	33-5/16	71-11/16	68
10 TON-2	394 LBS	5 TON	5 TON	32-13/16	69-9/16	65-7/8
10 TON-3	394 LBS	5 TON	5 TON	32-13/16	76-3/16	70-7/8
10 TON-4	394 LBS	5 TON	5 TON	32-13/16	97-3/16	91-15/16

R410A REFRIGERANT

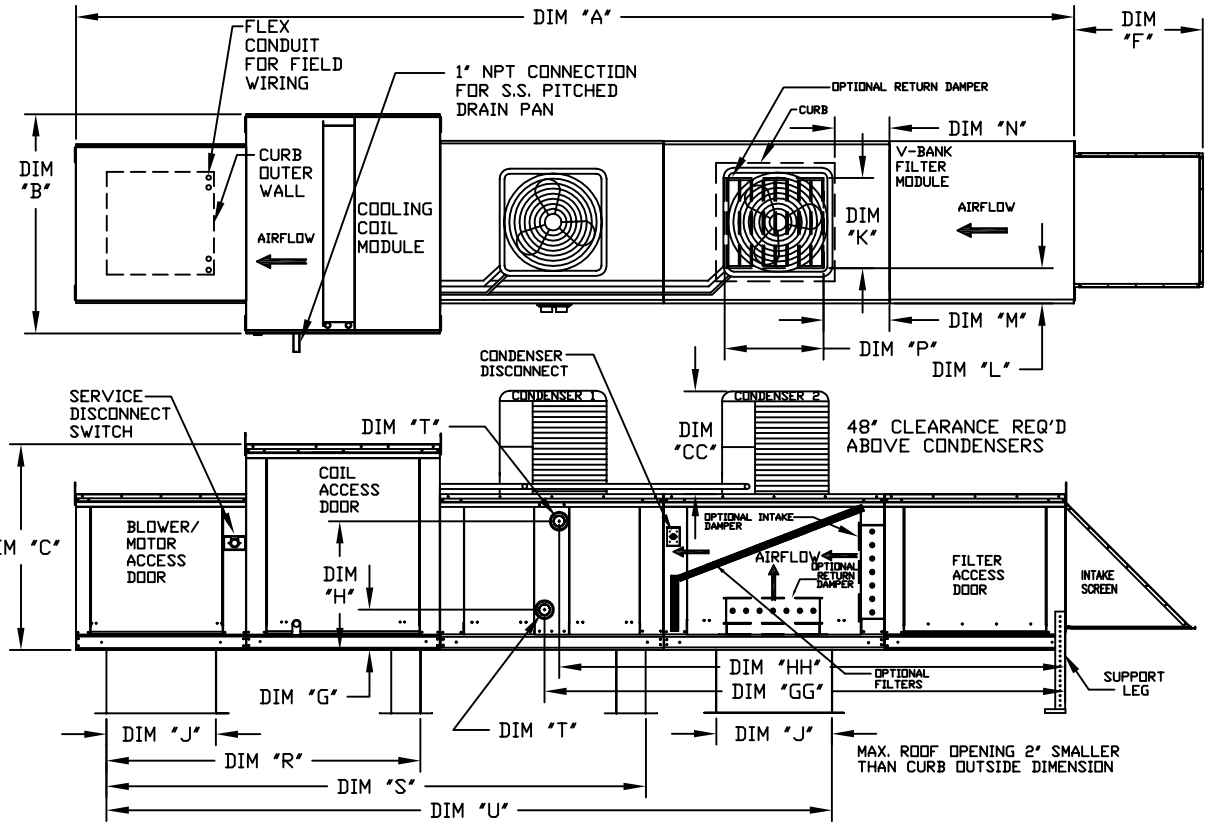

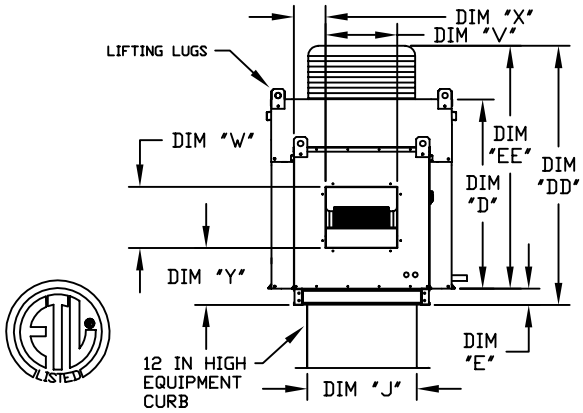

LL DIMENSIONS ARE NOMINAL AND GIVEN IN INCHES.

	UNIT DIMENSIONS							RETURN OPENING								BELT DRIVE DISCHARGE OPENING				DIRECT DRIVE DISCHARGE OPENING				TONNAGE RANGE	
UNIT SIZE	A	B	C	D	E	F	J	K	L	M	N	P	R	S	U	V	W	X	Y	V	W	X	Y	MIN	MAX
1	191-1/8	39-3/8	42-3/4	39	3-3/4	22-3/8	21	14	8	14	12-1/2	18	65-13/16	107-15/16	140-7/8	13-1/4	11-1/2	6-3/8	11-7/8	17-1/4	15-1/2	4-3/8	8-15/16	2 Ton	5 Ton
2**	199-1/8	49-3/8	47-3/4	44	3-3/4	30-5/16	31	22-3/4	8	11	7-1/2	24	74-5/8	116-3/4	154-7/8	15-3/4	13-9/16	10-1/8	13-1/16	N/A	N/A	N/A	N/A	5 Ton	10 Ton
2	199-1/8	49-3/8	47-3/4	44	3-3/4	30-5/16	31	22-3/4	8	11	7-1/2	24	74-5/8	116-3/4	154-7/8	18-3/4	16	8-5/8	14-1/16	24-3/4	22	5-5/8	10-15/16	5 Ton	10 Ton
3	214-1/8	54-3/8	56-3/8	51-1/8	5-1/4	34-3/16	35	28	8	7	4-1/2	30	79-3/16	121-5/16	162-3/8	22	19	9	17-7/8	28	25	6-1/16	14-15/16	10 Ton	10 Ton
4	281-7/16	60-7/16	64-3/8	59-1/8	5-1/4	47-1/4	42	33	10	11	8	36	104-9/32	158-15/32	208	24-7/8	24-7/8	11-1/16	19-1/8	30	30	8-9/16	16-5/8	10 Ton	10 Ton

HOT WATER COIL MODULE

UNIT SIZE	WEIGHT*	TOTAL CAPACITY (MBH)	PIPE CONNECTION "T" (MPT)	G	GG	H	HH
1	995 LBS	165.63	2	8-1/4	96-15/16	24-3/4	94-3/16
2**	1385 LBS	320.88	2	8-1/4	96-15/16	28-3/4	94-3/16
2	1395 LBS	320.88	2	8-1/4	96-15/16	28-3/4	94-3/16
3	1695 LBS	514.97	1-1/2	9-1/2	102-11/16	38	100-7/16
4	2760 LBS	831.87	2-1/2	10	118-1/4	45-1/2	114-5/8

STEAM COIL MODULE

UNIT SIZE	WEIGHT*	TOTAL CAPACITY (MBH)	PIPE CONNECTION "T" (MPT)	STEAM PSI	G	GG	H	HH
1	995 LBS	176.49	2-1/2	5	8-3/4	95-9/16	16-15/16	95-9/16
2**	1385 LBS	328.19	2-1/2	5	8-3/4	95-9/16	18-3/8	95-9/16
2	1395 LBS	328.19	2-1/2	5	8-3/4	95-9/16	18-3/8	95-9/16
3	1690 LBS	505.64	2-1/2	5	10-1/4	101-9/16	23-5/8	101-9/16
4	2735 LBS	812.24	2-1/2	5	10-1/4	116-25/32	28-5/8	116-25/32

*ADD CONDENSING UNIT WEIGHT TO WEIGHT IN TABLE ABOVE

** DIMENSIONS APPLY TO UNITS WITH G12 BLOWERS ONLY

V-BANK FILTER

UNIT SIZE	FILTER SIZE & QTY	MAX. FILTER VELOCITY	OPTIONAL MIXING BOX FILTERS
1	20"x25"x2" (3)	@3500 CFM = 406 FPM	10"x16"x2" (5)
2**	16"x20"x2" (8)	@5000 CFM = 358 FPM	20"x25"x2" (2), 16"x25"x2" (1)
2	16"x20"x2" (8)	@6000 CFM = 429 FPM	20"x25"x2" (2), 16"x25"x2" (1)
3	20"x25"x2" (8)	@8000 CFM = 348 FPM	15"x20"x2" (4), 15"x15"x2" (2)
4	16"x20"x2" (15)	@15000 CFM = 572 FPM	18"x25"x2" (4), 16"x20"x2" (2)