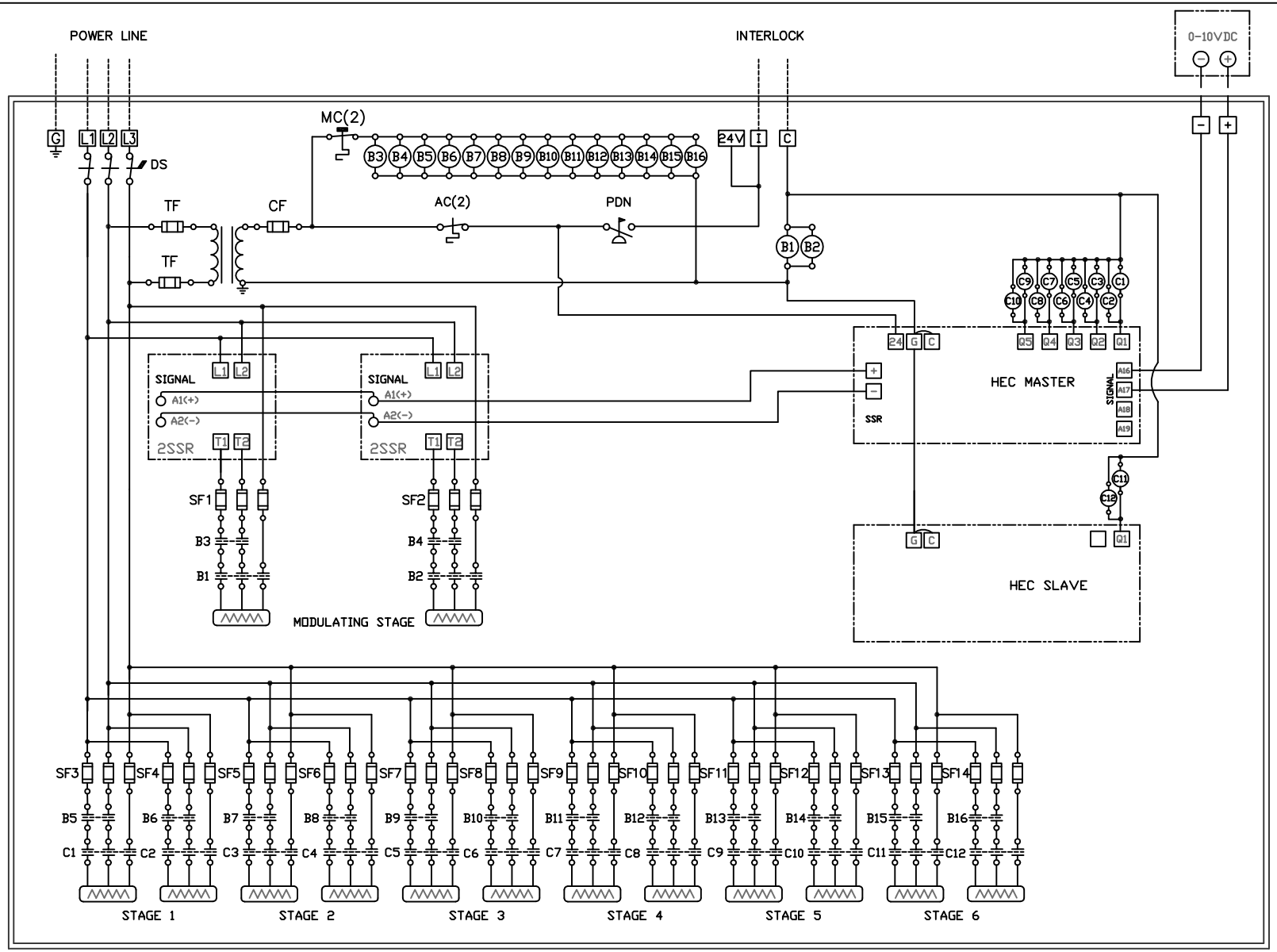

LEGEND

- AC — AUTOMATIC CUTOUT
- MC — MANUAL CUTOUT
- PDN — AIR FLOW SWITCH (NO, NC)
- DS — DISCONNECT SWITCH
- B1 — CONTACTOR COIL
- HEATING ELEMENT
- TR — TRANSFORMER
- CONTACT NORMALY OPEN
- FUSE

WARNING:
Disconnect all supplies before working on this duct heater

IMPORTANT:
Wire in according with electrical codes
Use copper wire for 90°C minimum

NOTE:
All wiring outside this frame are wiring by others

National Environmental Products Ltd 400 Lebeau, Montreal (QC) H4N 1R6 T: (514) 333-1433 F: 333-3163

PROPRIETARY INFORMATION : THIS DOCUMENT CONTAINS PRPRIETARY INFORMATION & IT'S PROPERTY OF N.E.P. LTD. THIS DOCUMENT AND THE INFORMATION IT CONTAINS SHALL NOT BE DUPLICATED OR USED IN WHOLE OR IN PART WITHOUT THE EXPRESS WRITTEN CONSENT OF N.E.P. LTD.

ELECTRICAL DRAWING

PART NUMBER: EMC5-151KW2403
PROJECT NAME: EMC-240-3_2015
CUSTOMER NAME: CAPTIVE AIRE, INC.